Code No: R21014 **R10** SET - 1

II B. Tech I Semester, Supplementary Examinations, May – 2013
FLUID MECHANICS
(Civil Engineering)

Time: 3 hours Max. Marks: 75

Answer any **FIVE** Questions
All Questions carry **Equal** Marks
~~~~~~~~~~~~~~~~~~~~~~~~~

1. a) A shaft of 50 mm diameter rotates in a 55 mm diameter cylinder 30 cm long at 180 rpm. If the space between the shaft and the cylinder is filled with a fluid of viscosity 2 poise. Assuming linear velocity distribution in the radial direction. Find the power required to overcome the viscous resistance for rotating the shaft.
   b) State and derive Pascal's law. (8M+7M)

2. a) Derive expressions for the magnitude and location of resultant force acting on an inclined plane surface due to hydrostatic pressure.
   b) The gate in the form of a quarter cylinder CD as shown in Figure 1 is 3 m long. Determine magnitude, direction and location of resultant force on CD. (8M+7M)

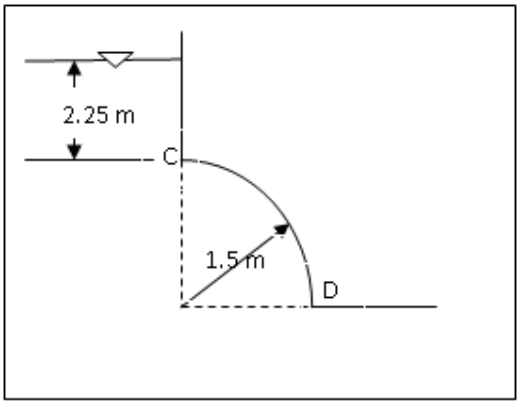

Figure 1

3. a) Define stream line, path line and streak line. Illustrate how these lines are different in a fluid flow.
   b) The x and y components of velocity in three dimensional flow are given as x^2+z^2 and y^2+z^2 respectively. Find the expression for the simplest z-component of velocity that satisfies continuity equation for incompressible flows. (8M+7M)
~~~~~~~~~~~~~~~~~~~~~~~~~

4. a) Derive Bernoulli's equation from Eulers equations for 3-D flows.
   b) A horizontal nozzle at the end of a 8.0 cm diameter hose produces a 4.0 m diameter jet. Determine the longitudinal force in the joint at the base of the nozzle when it discharges $0.22 m^3/s$ of water. (8M+7M)

5. a) Explain displacement thickness and momentum thickness and derive the expressions.
   b) Describe methods of reducing boundary layer separation. (8M+7M)

6. a) How does the energy loss due to friction vary in laminar and turbulent flows?
   b) Derive the expression for velocity distribution in inclined tubes in steady laminar flow condition. (8M+7M)

7. a) Derive the expression for loss of energy due to sudden expansion of pipe.
   b) A pipe line of 0.4 m diameter and 1 km long is connecting two reservoirs with differential water surface elevation of 30 m. To augment the discharge another pipe of same diameter is connected in the later half of the pipe line in parallel to the first pipe line. Calculate the percentage increase in the discharge due to the modification. (6M+9M)

8. a) Derive the expression for discharge through a Venturimeter fitted to an inclined pipe line in terms of Piezometric head difference between inlet and throat.
   b) A trapezoidal channel with a bottom width of 1.5 m and side slopes of 1 horizontal to 2 vertical has a 90^0 V- notch at the outlet end, the vertex of the notch being 45 cm above the bed of the channel. The water upstream of the notch has a depth of 1.2m. Taking coefficient of discharge of the notch as 0.62, calculate the percentage error in the discharge if the velocity of approach is neglected. (8M+7M)

Code No: R21014 **R10** SET - 2

II B. Tech I Semester, Supplementary Examinations, May – 2013
FLUID MECHANICS
(Civil Engineering)

Time: 3 hours Max. Marks: 75

Answer any **FIVE** Questions
All Questions carry **Equal** Marks
~~~~~~~~~~~~~~~~~~~~~~~~~

1. a) What is Newton's law of viscosity? Derive the expression for the shear stress.
   b) The space between two square flat parallel plates is filled with oil. Each side of the plate is 60 cm. The thickness of the oil film is 12.5mm. The upper plate which moves at 2m/sec requires a force of 98.1N to maintain the speed. Determine i) Dynamic viscosity of the oil in poise, and ii) the kinematic viscosity of the oil in stokes if the specific gravity of oil is 0.95. (7M+8M)

2. a) Explain the procedure through which the magnitude and location of resultant force due to hydrostatic pressure on a curved surface can be calculated.
   b) Predict the height, 'h' to which water must rise to tip or overturn the rectangular gate which is at 45^0 with horizontal as shown in Figure 1. Neglect the weight of the gate. (7M+8M)

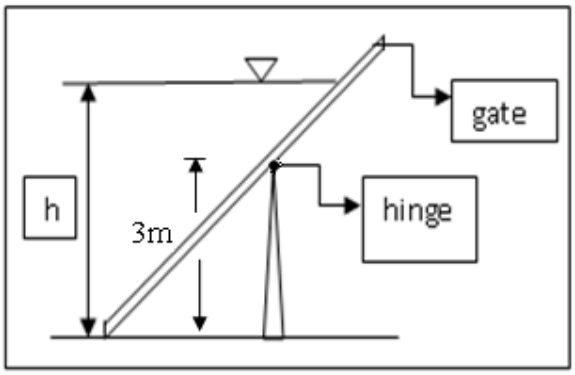

Figure 1

3. a) Derive three dimensional continuity equation.
   b) If the stream function of is given by $\psi=3x^2y+(2+t)y^2$. Find the velocity field and determine its value at a point defined by the position vector *i+2j-3k,* when t=2 s. (7M+8M)
~~~~~~~~~~~~~~~~~~~~~~~~~

4. a) Write down Navier Stokes equation and explain each of the terms involved in the equation.
   b) A conical pipe has diameter at the two ends of 0.5 m and 1.5 m and is 15 m long. It is vertical and the friction loss is 2.5 m for flow of water in either direction, when the velocity at the smaller section is 10 m/s. If the smaller section is at the top and the pressure head there is 2 m of water, find the pressure head at the lower end when the flow is upward. (7M+8M)

5. a) Explain Magnus effect.
   b) Calculate the friction drag on a plate 15 cm wide and 40 cm long placed longitudinally in a stream of oil of specific gravity 0.925 and kinematic viscosity of 0.9 stokes flowing with a free stream velocity of 6 m/s. Also find the thickness of the boundary layer and shear stress at the trailing edge. (5M+10M)

6. a) Derive expression for energy loss due to friction for steady laminar between two parallel plates.
   b) Oil of specific gravity 0.8 is pumped through a horizontal pipe line 15 cm in diameter and 3 km long, at the rate of 900 litres/minute. The pump has an efficiency of 68% and requires 7.35 kW, to pump the oil. Calculate the viscosity of oil assuming the flow to be laminar and ensuring it. (8M+7M)

7. a) What is an equivalent pipe and derive the equation for its diameter?
   b) Explain Moody's Chart and how it can be used to find the friction factor of commercial pipes. (8M+7M)

8. a) Explain the working principle of Pitot tube.
   b) Derive the expression for discharge over a triangular notch considering velocity of approach. (7M+8M)

Code No: R21014 **R10** SET - 3

II B. Tech I Semester, Supplementary Examinations, May – 2013
FLUID MECHANICS
(Civil Engineering)

Time: 3 hours Max. Marks: 75

Answer any **FIVE** Questions
All Questions carry **Equal** Marks
~~~~~~~~~~~~~~~~~~~~~~~~~~

1. a) Define capillarity and derive the expressions for capillary rise
   b) Calculate the capillary rise in a glass tube of 2.5mm diameter when immersed vertically in (a) water and (b) mercury. Take surface tension σ = 0.0725 N/m for mercury in contact with air. The specific gravity fer mercury is given as 13.6 and angle of contact = 130^0. (8M+7M)

2. a) Find out an expression for the centre of pressure for a plane immersed in water and inclined by an angle 'θ' to the free surface of water.
   b) An isosceles triangle of 4 m base and 6 m height is located vertically in the water whose height is parallel to free surface of water and its vertical height from free surface of water is 8m. Determine the pressure force acting on it and location of centre of pressure both vertically and laterally. (8M+7M)

3. a) Define velocity potential function and list out its properties. What is relationship between stream function and velocity potential function?
   b) Given that $u = x^2 - y^2$ and $v = -2xy$, determine the stream function and potential function for the flow. (7M+8M)

4. a) State Bernoulli's theorem for steady flow of an incompressible fluid. Derive an expression for Bernoulli's theorem from first principle and state the assumptions made for such a derivation.
   b) A liquid of specific gravity 1.3 flows in a pipe at a rate of 800 l/s, from point 1 to point 2 which is 1m above point1. The diameters at section 1 and 2 are 0.6m and 0.3m respectively. If the pressure at section 1 is 10 bar, determine the pressure at section 2. (8M+7M)
~~~~~~~~~~~~~~~~~~~~~~~~~~

5. a) Define displacement thickness. Derive an expression for the displacement thickness.
   b) Determine the friction drag on an airship 100 m long and 20 m diameter when it travels at 130 kmph. The condition of air is 25 °C and 0.9 bar. (8M+7M)

6. a) Determine: i) the pressure gradient, ii) the shear stress at the two horizontal parallel plates and iii) the discharge per meter width for the laminar flow of oil with a maximum velocity of 2 m/s between two horizontal parallel fixed plates which are 100 mm apart. Given $\mu = 2.4525$ N s/m^2.
   b) Describe Reynolds experiments to demonstrate the two types of flow. (8M+7M)

7. a) What do you understand by total energy line, hydraulic gradient line, pipes in series, pipes in parallel and equivalent pipe.
   b) Find the loss of head when a pipe of diameter 200 mm is suddenly enlarged to a diameter of 400 mm. The rate of flow of water through the pipe is 250 liters/s. (8M+7M)

8. a) Derive the expression for computing discharge through an orifice meter
   b) A rectangular notch of 250 cm width is used to measure the flow rate of water in an open channel. If the actual flow rate is 1.16m^3/s, under a head of 0.253m. Determine the coefficient of discharge of the notch. (8M+7M)

Code No: R21014 **R10** SET - 4

II B. Tech I Semester, Supplementary Examinations, May – 2013
FLUID MECHANICS
(Civil Engineering)

Time: 3 hours Max. Marks: 75

Answer any **FIVE** Questions
All Questions carry **Equal** Marks
~~~~~~~~~~~~~~~~~~~~~~~~~~

1. a) Two large plates are 6 mm apart and the space in-between in filled with a fluid. A plate of 1 mm thickness and 10 cm square is pulled parallel to the planes and midway between them with a velocity of 2 m/s. Assume linear velocity profile on either side. The force required was 0.32 N. Determine the viscosity of the fluid.
   b) Determine the density, specific weight and specific volume of air if the specific gravity (with water as reference fluid) is 0.011614. (8M+7M)

2. a) What do you understand by 'Total Pressure' and 'Center of Pressure'?
   b) Derive an expression for the force exerted on a sub-merged vertical plane surface by the static liquid and locate the position of center of pressure. (7M+8M)

3. a) Explain the following:
   i) Path line, ii) Streak line, iii) Stream line, and iv) Stream tube.
   b) 250 liters/s of water is flowing in a pipe having a diameter of 300 mm. If the pipe is bent by 135° (that is change from initial to final direction is 135°), find the magnitude and direction of the resultant force on the bend. The pressure of water flowing is 39.24N/cm^2. (8M+7M)

4. a) Derive Bernoulli's equation for the flow of an incompressible frictionless fluid from consideration of momentum.
   b) Water flows through a horizontal venturimeter with diameters of 0.6 m and 0.2 m. The gauge pressure at the entry is 1 bar. Determine the flow rate when the throat pressure is 0.5 bar (vacuum). Barometric pressure is 1 bar. (8M+7M)
~~~~~~~~~~~~~~~~~~~~~~~~~~

5. a) Explain the characteristics of laminar and turbulent boundary layers.

   b) It is required to determine the frictional drag of a submarine. The length of the hull is 75 m and its surface area is 3,000 m^2. The submarine is travelling at a constant speed of 5 m/sec. Critical Reynolds number at which the flow in the boundary layer changes from the laminar to turbulent is $5x10^5$. Assuming that the boundary layer at the leading edge is laminar,obtain the frictional drag and horse power required to propel the submarine at 5 m/sec. Take ν=0.01 cm^2/sec and ρ=102 msl/m^3 (8M+7M)

6. Derive an expression for mean velocity for laminar flow i) through a pipe; ii) between parallel plates. (15M)

7. a) Why are the pipes connected in parallel? What is the loss of head in pipes of same length which are connected in parallel?

   b) A pipe of 25 cm in diameter and 400 m long is carrying oil whose sp.gr.= 0.82 and μ =0.075 poise. The oil flow rate is 100 liters/sec. Find the head lost in the pipe and power required to maintain the flow. (8M+7M)

8. a) What is a notch? How are the notches classified?

   b) Water flows at the rate of 0.147 m^3/sec through a 15 cm diameter orifice inserted in a 30 cm diameter pipe. If the pressure gages fitted upstream and downstream of the orifice plate have shown readings of 1.8 kg/cm^2 and 0.9 kg/cm^2 respectively, find the coefficient of discharge C_d of the orifice meter. (8M+7M)