Code No: R21042 **R10** SET - 1

II B. Tech I Semester, Supplementary Examinations, May – 2013
NETWORK ANALYSIS
(Com. to ECE, EIE, ECC)

Time: 3 hours Max. Marks: 75

Answer any **FIVE** Questions
All Questions carry **Equal** Marks
~~~~~~~~~~~~~~~~~~~~~~~~~~

1. a) Write the classification of network elements?
   b) Derive the expression for energy stored in an element of inductance 'L' Henry carrying a current 'i' Amperes over a period of 't' second.

2. a) Define the terms Frequency, RMS value, and average value.
   b) Two alternating currents represented by the equations $i_1=7 \sin \omega t$ and $i_2=10 \sin (\omega t+\pi/3)$ are fed into common conductor. Find the equation for resultant current and its RMS value.

3. a) For the network shown in Figure 1, determine i) current I_1, ii) current I_2, iii) current I, iv) Equivalent input impedance.

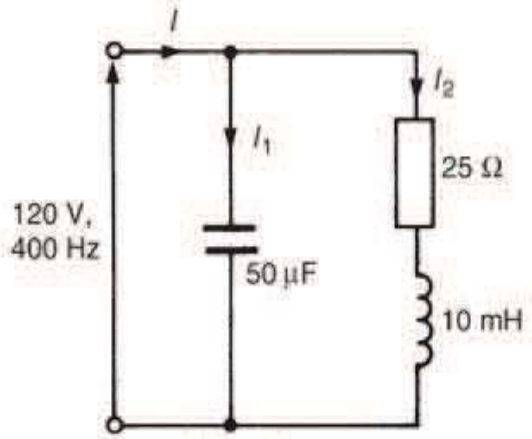

Figure 1

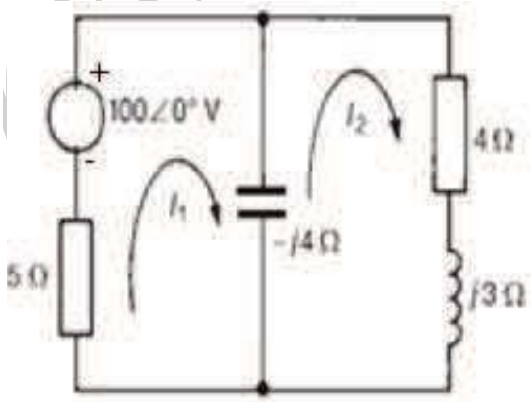

Figure 2

   b) For the AC network shown in Figure 2, using mesh-current analysis, find: i) the mesh currents I_1 and I_2. ii) the current flowing in the capacitor

4. a) Derive the expression for coefficient of coupling 'K' for two magnetically couple coils of inductance L_1 and L_2 Henrys.
   b) The current at resonance in a series L–C–R circuit is 100 μA. If the applied voltage is 2 mV at a frequency of 200 kHz, and the circuit inductance is 50 μH, find: i) the circuit resistance, and ii) the circuit capacitance.
~~~~~~~~~~~~~~~~~~~~~~~~~~

5. a) Use Thevenin's theorem to determine the current 'I' flowing in the 4 Ω resistor shown in Figure.3. Find also the power dissipated in the 4Ω resistor.

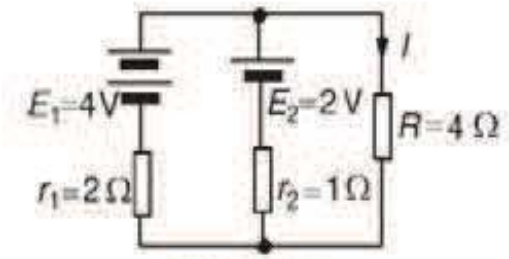

Figure 3

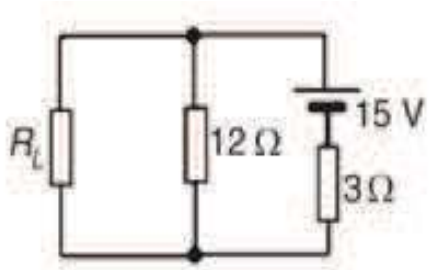

Figure 4

b) Find the value of the load resistor R_L shown in Figure 4 that gives maximum power dissipation and determine the value of this power.

6. Develop the *z*-parameter, and *h*-parameter equivalent circuits. Also express the *z*-parameters in terms of *y*-parameters.

7. a) A 20 μF capacitor is connected in series with a 50 kΩ resistor and the circuit is connected to a 20 V, dc supply. Determine
   i) The initial value of the current flowing,
   ii) The time constant of the circuit,
   iii) The value of the current one second after connection,
   iv) The value of the capacitor voltage two seconds after connection

   b) In the series-parallel network shown in Figure 5. A 5 V step voltage is applied at the input terminals. Determine an expression to show how current 'i' varies with time.

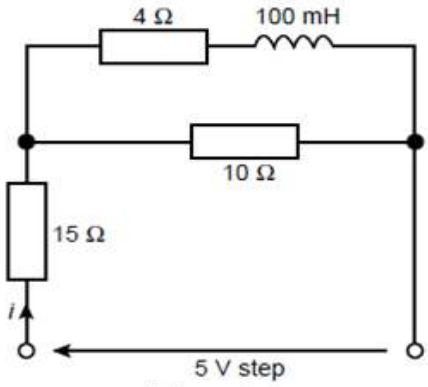

Figure 5

8. a) Explain the design of low pass filter.

   b) A filter section is to have characteristic impedance at zero frequency of 600 Ω and a cutoff frequency at 5 MHz. Design i) a low-pass T section filter, and ii) a low-pass π section filter to meet these requirements.

Code No: R21042 **R10** SET - 2

II B. Tech I Semester, Supplementary Examinations, May – 2013
NETWORK ANALYSIS
(Com. to ECE, EIE, ECC)

Time: 3 hours Max. Marks: 75

Answer any **FIVE** Questions
All Questions carry **Equal** Marks
~~~~~~~~~~~~~~~~~~~~~~~~~~

1. a) Define Electric Charge, Current, Potential difference, Power and Energy.
   b) Derive the expression for energy stored in an element of capacitance 'C' Farads with a 'V' volts potential across the terminals over a period of't' second.

2. a) An alternating current varying sinusoidally with a frequency of 50Hz has an RMS value of 20A. Write down the equation of instantaneous value of current and find this value at i) 0.0025 second ii) 0.0125 second after passing through a positive maximum value.
   b) Explain principle of Duality. Prove that Series RLC circuit driven by a Voltage source is Dual of Parallel RLC Circuits driven by current source.

3. a) Determine, for the network shown in Figure 1, i) total network admittance, ii) total network impedance, iii) the supply current I, iv) the network phase angle, and v) currents I_1, I_2, $I_3$and I_4.

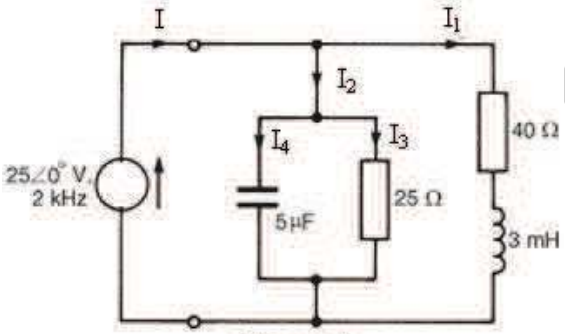

Figure 1

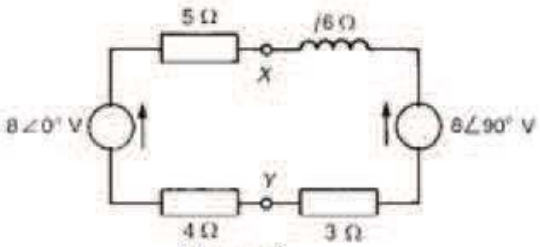

Figure 2

   b) Determine the value of voltage V_{XY} shown in the circuit of Figure 2
~~~~~~~~~~~~~~~~~~~~~~~~~~

4. a) Two magnetically coupled coils are having self inductances 'L_1 'and 'L_2', Mutual inductance 'M'. Determine the equivalent inductance if they are connected in series aiding condition
   b) A coil of negligible resistance and inductance 100 mH is connected in series with a capacitance of 2 μF and a resistance of 10Ω across a 50 V, variable frequency supply. Determine i) resonant frequency, ii) current at resonance, iii) voltages across coil and capacitor at resonance, and iv) Q-factor of the circuit.

5. a) Use Thevenin's theorem to determine the current flowing in the 3Ω resistance of the network shown in Figure 3.
   b) Use superposition theorem to find currents in 10 ohms and 20 ohms resistances of Figure 4.

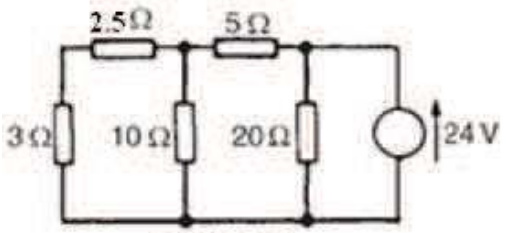

Figure 3

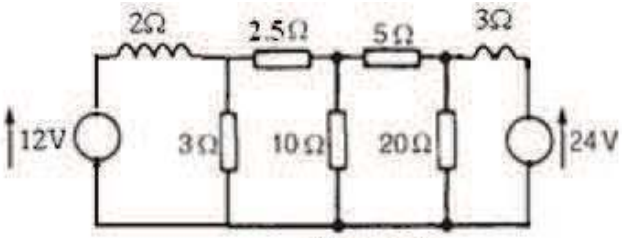

Figure 4

6. Develop the y-parameter, and *Transmission*-parameter equivalent circuits. Also express the *y*-parameters in terms of transmission-parameters.

7. a) A circuit consists of a resistor connected in series with a 0.5 μF capacitor and has a time constant of 12 ms. Determine i) value of the resistor, and ii) the capacitor voltage 7 ms after connecting the circuit to a 10 V supply.
   b) For the circuit shown in Figure 5. Use Laplace Transform to derive expression for current. Assume zero initial conditions when the switch is closed.

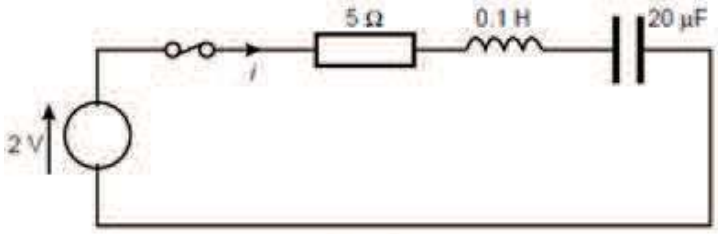

Figure 5

8. a) Explain the design of high pass filter.
   b) A filter is required to pass all frequencies above 25 kHz and to have a nominal impedance of 600 Ω. Design i) a high-pass T section filter and ii) a high-pass π section filter to meet these requirements.

Code No: R21042 **R10** SET - 3

II B. Tech I Semester, Supplementary Examinations, May – 2013
NETWORK ANALYSIS
(Com. to ECE, EIE, ECC)

Time: 3 hours Max. Marks: 75

Answer any **FIVE** Questions
All Questions carry **Equal** Marks
~~~~~~~~~~~~~~~~~~~~~~~~

1. a) Write the classification of energy sources.
   b) Explain current division in a string of resistances connected in parallel.

2. a) An alternating voltage is given by v(t)=141.4 sin (314t). Find: i) Frequency ii) RMS value iii) Average Value iv) The Instantaneous value of voltage when 't' is 3 msec.
   b) Three alternating currents expressed by $i_A = 7.07\sin(314t)$, $i_B = 1.2\,sin\,(314\,t - \pi/4)$ and $i_C = 7.07\,sin(314t + \pi/3)$ are flowing in three branches of parallel circuit fed from single phase ac supply. Find the expression for resultant current drawn by the circuit.

3. a) In the network shown in Figure 1, the voltmeter across 4 ohms resistor indicates 24 V. Determine the reading of the ammeter.

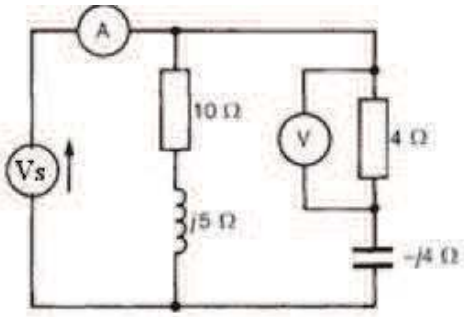

Figure 1

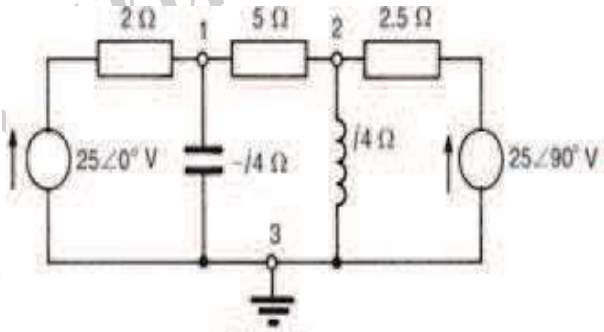

Figure 2

   b) In the network of Figure 2, use nodal analysis to determine i) the voltage at nodes 1 and 2, ii) The current in the j4 Ω inductance, iii) the current in the 5 Ω resistance, and iv) the magnitude of the active power dissipated in the 2.5 Ω resistance.

4. a) Two magnetically coupled coils are having self inductances 'L_1 'and 'L_2', Mutual inductance 'M'. Determine the equivalent inductance if they are connected in Parallel aiding condition.
   b) A coil of resistance 25 Ω and inductance 100 mH is connected in series with a capacitance of 0.12 μF across a 200 V, variable frequency supply. Calculate: i) resonant frequency, ii) current at resonance and iii) factor by which voltage across the reactance is greater than the supply voltage.

|''|'||'|''|'|''''|
~~~~~~~~~~~~~~~~~~~~~~~~

5. a) Use Norton's theorem to determine the current flowing in the 10 resistance for the circuit shown in Figure 3.

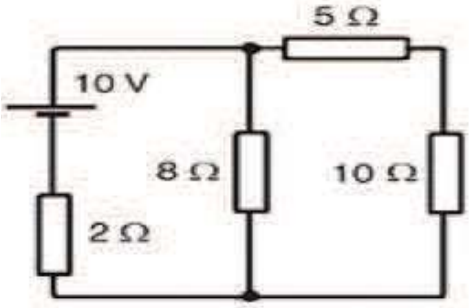

Figure 3

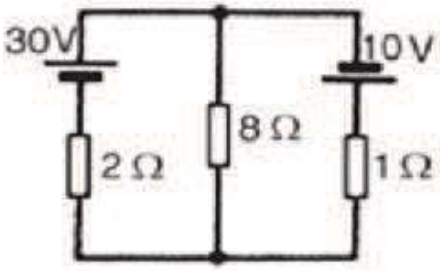

Figure 4

b) Use the superposition theorem to find the current in the 8Ω resistor of Figure 4.

6. Develop the h-parameter, and *Transmission*-parameter equivalent circuits. Also express the h-parameters in terms of *Transmission* -parameters.

7. a) The winding of an electromagnet has an inductance of 3 H and a resistance of 15Ω. When it is connected to a 120 V, dc supply, calculate:
   i) the steady state value of current flowing in the winding,
   ii) the time constant of the circuit,
   iii) the value of the induced e.m.f. after 0.1 s,
   iv) the time for the current to rise to 85% of its final value

   b) An L–R–C series circuit contains a coil of inductance 1 H and resistance 8 Ω and a capacitor of capacitance 50μF. Assuming current 'i=0' at time t=0, determine i) the state of damping in the circuit, and ii) an expression for the current when a step voltage of 10 V is applied to the circuit.

8. a) A filter network consists of 8 sections in cascade having a nominal impedance of 1 kΩ. If the total delay time is 4μs, determine the component values for each section if the filter is i) a low-pass T network, and ii) a high-pass π network.

   b) Explain the design of Low pass m-derive section.

Code No: R21042 **R10** SET - 4

II B. Tech I Semester, Supplementary Examinations, May -2013
NETWORK ANALYSIS
(Com. to ECE, EIE, ECC)

Time: 3 hours Max. Marks: 75

Answer any **FIVE** Questions
All Questions carry **Equal** Marks
~~~~~~~~~~~~~~~~~~~~~~~~~

1. a) Explain Kirchhoff's Laws?
   b) Explain voltage division across a string of Resistors connected in series.
   c) Derive the expression for power dissipated in an element of R-Ω, carrying a current 'I' Amps.

2. a) Define Average value, Form factor, Peak factor of an alternating quantity.
   b) Define the terms branch, node, tree, planar, non-planar graph.
   c) The instantaneous values of two alternating voltages are represented by $10\angle 30^0\ V$ and $16\angle -30^0\ V$. Derive the expression for the instantaneous values of (i) the sum and (ii) the difference of these voltages.

3. a) For the parallel network shown in Figure 1, determine i) the equivalent circuit impedance, ii) the supply current I, iii) the circuit phase angle, and iv) currents I_1 and I_2

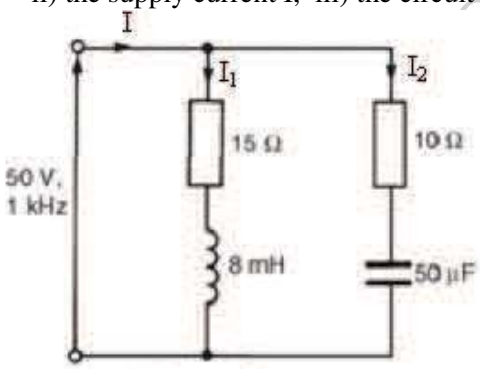

Figure 1

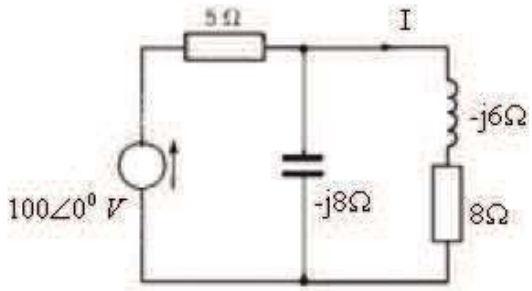

Figure 2

   b) For the network shown in Figure 2, use mesh-current analysis to determine the value of current I and the active power output of the voltage source.

4. a) Two magnetically coupled coils are having self inductances 'L_1 'and 'L_2', Mutual inductance 'M'. Determine the equivalent inductance if they are connected in series opposition condition.
   b) The current at resonance in a series L–C–R circuit is 0.2 mA. If the applied voltage is 250 mV at a frequency of 100 kHz and the circuit capacitance is 0.04 μF, find the circuit resistance and inductance.

|''|'||'|''|'|'''|
~~~~~~~~~~~~~~~~~~~~~~~~~

5. a) Convert the circuit to the left of terminals AB in Figure 3, to an equivalent Thevenin circuit by initially converting to a Norton equivalent circuit. Determine the current flowing in the 1.8 Ω resistor.

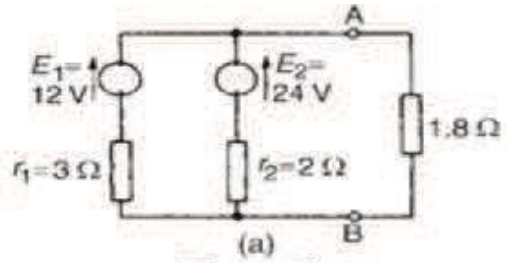

Figure 3

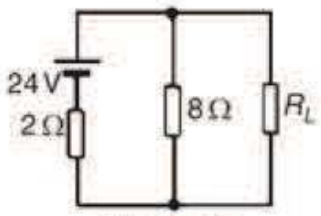

Figure 4

b) Determine the value of the load resistance R_L shown in Figure 4, that gives maximum power dissipation and find the value of the power consumed by load resistance.

6. Develop the z-parameter, and h-parameter equivalent circuits. Also express the z-parameters in terms of *h*-parameters.

7. a) An inductor has a negligible resistance and an inductance of 200 mH and is connected in series with a 1 kΩ resistor to a 24 V, dc supply. Determine the time constant of the circuit and the steady-state value of the current flowing in the circuit.
   Also find: i) the current flowing in the circuit at a time equal to one time constant,
   ii) the voltage drop across the inductor at a time equal to two time constants and
   iii) the voltage drop across the resistor after a time equal to three time constants.

   b) Derive an equation for current 'i' flowing through the 1 kΩ resistor in Figure 5 using Laplace Transforms, when the switch is moved from 'x' to' y'. Assume that the switch has been in position' x' for some time.

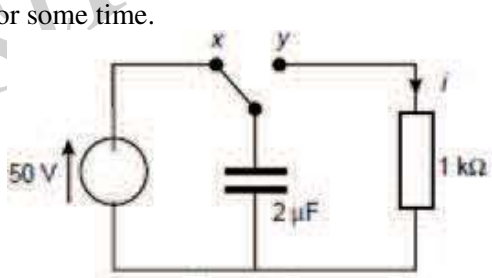

Figure 5

8. a) A filter section is to have a characteristic impedance at zero frequency of 500 Ω and a cut-off frequency of 1 kHz. Design i) a low-pass T section filter, and ii) a low-pass π section filter to meet these requirements.

   b) Explain the design of high pass m-driven section.