XE (B): Q. 1 – Q. 9 carry one mark each & Q. 10 – Q. 22 carry two marks each.

Q.1 Rheological diagram of different types of fluids is shown in figure. Column I represents the nature of the fluid and column II represents the curve showing the variation of shear stress against shear strain rate.

Column I		Column II
(i)	Newtonian	M
(ii)	Shear thinning	N
(iii)	Shear thickening	O
(iv)	Bingham plastic	P

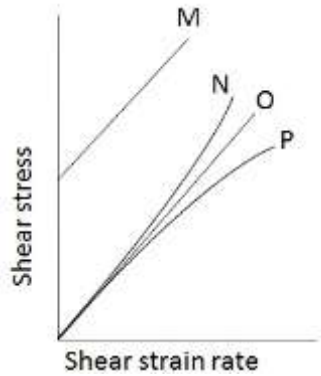

The most appropriate match between columns I and II is,
(A) (i) – O; (ii) – N ; (iii) – P; (iv) – M
(B) (i) – O; (ii) – P ; (iii) – N; (iv) – M
(C) (i) – P; (ii) – O ; (iii) – M; (iv) – N
(D) (i) – P; (ii) – O ; (iii) – N; (iv) – M

Q.2 In a two-dimensional, incompressible and irrotational flow, stream function ($\psi = \psi(x, y)$) and velocity potential ($\phi = \phi(x, y)$) exist. The velocities in x and y directions are non-zero. The product of $\left.\frac{dy}{dx}\right|_{\phi=\text{constant}}$ and $\left.\frac{dy}{dx}\right|_{\psi=\text{constant}}$, is

(A) -1 (B) 0 (C) 1 (D) ∞

Q.3 The inviscid flow past a rotating circular cylinder can be generated by the superposition of

(A) uniform flow, source and vortex
(B) uniform flow, doublet
(C) uniform flow, sink and vortex
(D) uniform flow, doublet and vortex

Q.4 The velocity field and the surface normal vector are given by, $\vec{V} = u\hat{i} + v\hat{j} + w\hat{k}$ and $\vec{n} = n_1\hat{i} + n_2\hat{j} + n_3\hat{k}$, respectively. If Euler equations are to be solved, the boundary condition that must be satisfied at the wall is,

(A) $\vec{V} \cdot \vec{n} = 0$ (B) $\vec{V} = 0$ (C) $\nabla \cdot \vec{V} = 0$ (D) $\vec{V} \times \vec{n} = 0$

Q.5 The influence of Froude number is most significant in

(A) capillary flows
(B) creeping flows
(C) free surface flows
(D) compressible flows

Q.6 If the stream function ($\psi(x, y)$) for a two-dimensional incompressible flow field is given as $2y\left(x^2 - y^2\right)$, the corresponding velocity field is

(A) $\vec{V} = 2\left(x^2 - 3y^2\right)\hat{i} + 4xy\,\hat{j}$

(B) $\vec{V} = 2\left(x^2 - 3y^2\right)\hat{i} - 4xy\,\hat{j}$

(C) $\vec{V} = 2\left(x^2 y\right)\hat{i} - 4xy\,\hat{j}$

(D) $\vec{V} = 2\left(x^2 y\right)\hat{i} + 4xy\,\hat{j}$

Q.7 Water is flowing in two different tubes of diameters D and $2D$, with the same velocity. The ratio of laminar friction factors for the larger diameter tube to the smaller diameter tube is

(A) 0.5 (B) 1.0 (C) 2.0 (D) 4.0

Q.8 If the velocity field is $\vec{V} = xy^2\,\hat{i} + 4xy\,\hat{j}$ m/s, vorticity of the fluid element in the field at (x=1, y=2) in s^{-1} is ____.

Q.9 A pitot-static tube is used to measure air velocity in a duct by neglecting losses. The density of air is 1.2 kg/m^3. If the difference between the total and static pressures is 1 kPa, the velocity of air at the measuring location, in m/s, is _____.

Q.10 A parallelepiped of (2 m × 2 m) square cross-section and 10 m in length, is partially floating in water upto a depth of 1.2 m, with its longest side being horizontal. The specific gravity of the block is

(A) 0.8 (B) 0.6 (C) 0.5 (D) 0.4

Q.11 The velocity field in a two-dimensional, unsteady flow is given by $\vec{V}(x, y, t) = 2xy^2\,\hat{i} + 3xyt\,\hat{j}$ m/s. The magnitude of acceleration of a fluid particle located at x = 1 m, y = 1 m at the time t = 1 s, in m/s^2, is

(A) 16.0 (B) 18.1 (C) 24.1 (D) 34.1

Q.12 In a two-dimensional, incompressible and irrotational flow, fluid velocity (v) in the y-direction is given by $v = 2x - 5y$. The velocity (u) in the x-direction is

(A) $u = 2x - 5y$ (B) $u = 2x + 5y$ (C) $u = 5x + 2y$ (D) $u = 5x - 2y$

Q.13 A two-dimensional laminar viscous liquid film of constant thickness (h) steadily flows down an incline as shown in figure. Acceleration due to gravity is g. If the velocity profile in the liquid film is given as, $u = ky(2h - y)$; $v = 0$, the value of constant k is

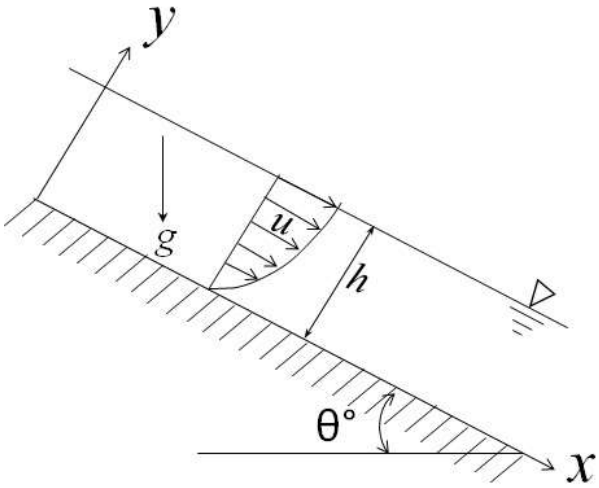

(A) $\dfrac{\rho g \sin\theta}{2\mu}$

(B) $\dfrac{\rho g \cos\theta}{2\mu}$

(C) $\rho g \sin\theta$

(D) $\rho g \cos\theta$

Q.14 A water jet of 100 mm diameter issuing out of a nozzle at a speed of 50 m/s strikes a vane and flows along it as shown in figure. The vane is attached to a cart which is moving at a constant speed of 20 m/s on a frictionless track. The jet is deflected at an angle of 30°. Take the density of water as 1000 kg/m^3. Neglecting the friction between the vane and the fluid, the magnitude of the force exerted by water on the cart in the x-direction, in N, is _____.

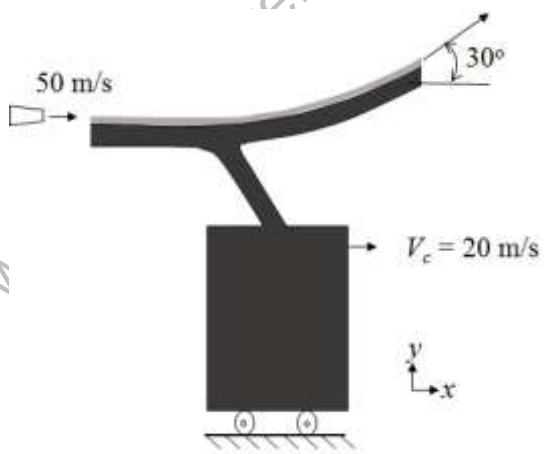

Q.15 Capillary waves are generated in the sea. The speed of propagation (C) of these waves is known to be a function of density (ρ), wave length (λ), and surface tension (σ). Assume, ρ and λ to be constant. If the surface tension is doubled, in the functional form of the relevant non-dimensional group, the percentage increase in propagation speed (C) is _____ .

Q.16 Consider a fully developed, two-dimensional and steady flow of a viscous fluid between two fixed parallel plates separated by a distance of 30 mm. The dynamic viscosity of the fluid is 0.01 kg/m-s and the pressure drop per unit length is 300 Pa/m. The fluid velocity at a distance of 10 mm from the bottom plate, in m/s, is _____.

Q.17 A 2.6 gram smooth table-tennis (ping-pong) ball has a diameter of 38 mm. Density (ρ) of air is 1.2 kg/m^3. Neglect the effect of gravity. Take coefficient of drag as 0.5. If the ball is struck with an initial velocity of 30 m/s, the initial deceleration, in m/s^2, is _____.

Q.18 On a flat plate, transition from laminar to turbulent boundary layer occurred at a critical Reynolds number (Re_{cr}). The empirical relations for the laminar and turbulent boundary layer thickness are given by $\frac{\delta_{lam}}{x} = 5.48\,\mathrm{Re}_x^{-0.5}$ and $\frac{\delta_{turb}}{x} = 0.37\,\mathrm{Re}_x^{-0.2}$, respectively. The ratio of laminar to turbulent boundary layer thickness, at the location of transition, is 0.3. The value of Re_{cr} is _____.

Q.19 In a capillary tube of radius R = 0.25 mm, a fully developed laminar velocity profile is defined as, $u = \frac{R^2}{4\mu}\left(-\frac{dp}{dx}\right)\left(1-\frac{r^2}{R^2}\right)$. In this expression, $-\frac{dp}{dx} = 1$ MPa/m, μ is the dynamic viscosity of the fluid, and r is the radial position from the centerline of the tube. If the flow rate through the tube is 1000 mm^3/s, the viscosity of the fluid, in Pa-s, is _____.

Q.20 The skin friction coefficient for a turbulent pipe flow is defined as, $C_f = \frac{\tau_w}{1/2\,\rho V^2}$, where τ_w is the wall shear stress and V is the average flow velocity. The value of C_f is empirically given by the relation: $C_f = 0.065\left(2/\mathrm{Re}\right)^{0.25}$, where Re is the Reynolds number. If the average flow velocity is 10 m/s, diameter of the pipe is 250 mm, kinematic viscosity of the fluid is 0.25×10^{-6} m^2/s, and density of the fluid is 700 kg/m^3, the skin friction drag induced by the flow over 1 m length of the pipe, in N, is _____.

Q.21 A (150 mm × 150 mm) square pillar is located in a river with water flowing at a velocity of 2 m/s, as shown in figure. The height of the pillar in water is 8 m. Take density of water as 1000 kg/m^3 and kinematic viscosity as 1×10^{-6} m/s^2. The coefficient of drag of the pillar is 2.0. The drag force exerted by water on the pillar in N is _____.

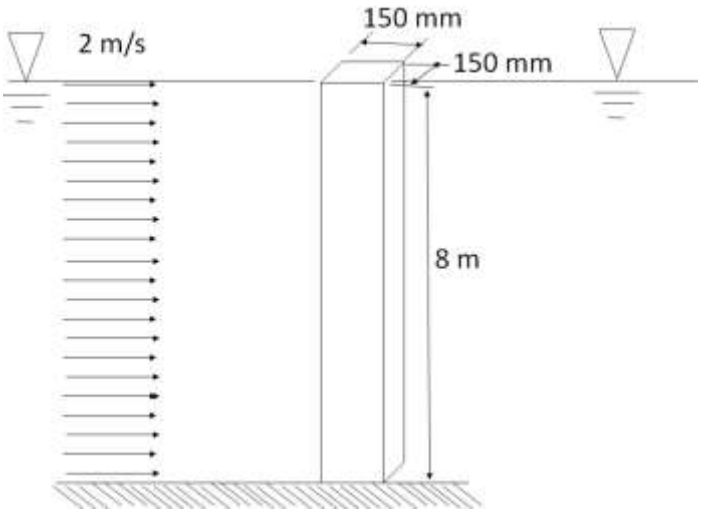

Q.22 An orifice plate is used to measure flow rate of air (density = 1.23 kg/m^3) in a duct of 250 mm diameter as shown in figure. The volume flow rate is 1 m^3/s. Flow at sections 1 and 3 is uniform and section 2 is located at vena contracta. The diameter ratio, D_t/D_1, is 0.66. The flow area at vena contracta, $A_2 = 0.65A_t$, where A_t is area of the orifice. The pressure difference between locations 2 and 3 in N/m^2 is _____.

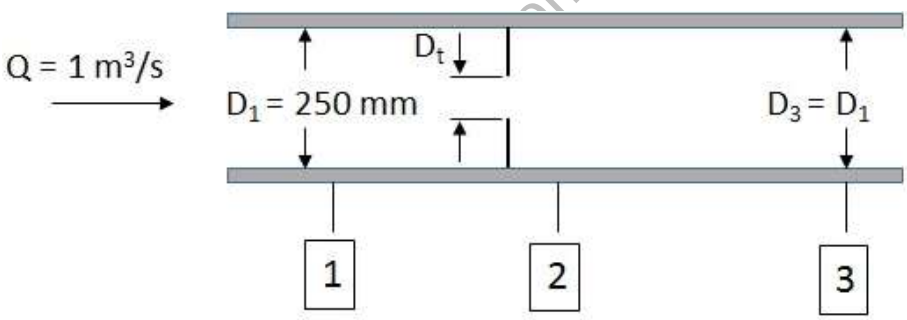

END OF THE QUESTION PAPER