FirstRanker.com
Firstranker's choice
www.FirstRanker.com www.FirstRanker.com

LECTURE NOTES

ON

ENGINEERING DRAWING

I B.TECH. JNTU (R16)

All JNTU World
www.FirstRanker.com
All JNTU World
Get The Most Out Of Imagineering

ENGINEERING DRAWING

I Semester: AE / CE / ME

Course Code	Category	Hours / Week			Credits	Maximum Marks		
		L	T	P	C	CIA	SEE	Total
AME001	Foundation	2	-	3	4	30	70	100
Contact Classes: 30	Tutorial Classes: Nil	Practical Classes: 45				Total Classes: 75		

OBJECTIVES:

The course should enable the students to:

I. Understand the basic principles of engineering drawing and construction of curves used in engineering field.
II. Apply the knowledge of interpretation of projection in different quadrants.
III. Understand the projections of solids, when it is inclined to both planes simultaneously.
IV. Convert the pictorial views into orthographic view and vice versa.
V. Create intricate details of components through sections and develop its surfaces.

UNIT-I	FUNDAMENTALS OF ENGINEERING DRAWING, SCALES AND CURVES	Classes: 09

Introduction to engineering drawing: Drawing instruments and accessories, types of line, lettering practice and rules of dimensioning, geometrical constructions, basic geometrical shapes; Scales: Types of scales, units of length and their conversion, construction of scales, plain scale, diagonal scale, vernier scale; Curves used in engineering practice and their constructions; Conic sections, construction of ellipse parabola and hyperbola, special curves, construction of cycloid, epicycloids, hypocycloid and involutes.

UNIT-II	ORTHOGRAPHIC PROJECTION, PROJECTION OF PLANES	Classes: 09

Orthographic projection: Principles of orthographic projections, conventions, first and third angle projections, projection of points, projection of lines, lines inclined to single plane, lines inclined to both the planes, true lengths and traces; Projection of planes: Projection of regular planes, planes inclined to one plane, planes inclined to both planes, projection of planes by auxiliary plane projection method.

UNIT-III	PROJECTION OF SOLIDS	Classes: 09

Projection of solids: Projections of regular solid, prisms, cylinders, pyramids, cones.

Solids inclined to one plane, solids inclined to both planes, projection of solid by auxiliary plane projection method.

UNIT-IV	DEVELOPMENT OF SURFACES, ISOMETRIC PROJECTIONS	Classes: 09

Development of surfaces: Development of lateral surface of right regular solids, prisms, cylinders, pyramids and cones; Isometric projections: Principle of isometric projection, isometric scale, isometric projections and isometric views, isometric projections of planes, prisms, cylinders, pyramids, and cones.

UNIT-V	TRANSFORMATION OF PROJECTIONS	Classes: 09

Transformation of projections: Conversion of isometric views to orthographic views and conversion of orthographic views to isometric views.

All JNTU World
www.FirstRanker.com

FirstRanker.com
Firstranker's choice
www.FirstRanker.com www.FirstRanker.com

Text Books:
1. N.D. Bhatt, "Engineering Drawing", Charotar Publications, 49th Edition, 2012. 2. C. M.Agrawal, Basant Agrawal, "Engineering Drawing"", Tata McGraw Hill, 2nd Edition, 2013.
Reference Books:
1. K. Venugopal, "Engineering Drawing and Graphics",New Age Publications,2nd Edition, 2010. 2. Dhananjay. A. Johle, "Engineering Drawing",Tata McGraw Hill, 1st Edition, 2008. 3. K. C. John, "Engineering Drawing", PHI Learning Private Limited", 2nd Edition, 2009.
Web References:
1. https://nptel.ac.in/courses/112103019/ 2. https://nptel.ac.in/courses/112103019/14
E-Text Book:
1. https://books.google.co.in/books/about/Engineering_Drawing.html?id=_hdOU8kRb2AC

All JNTU World
www.FirstRanker.com

FirstRanker.com
Firstranker's choice

UNIT I

All JNTU World

FirstRanker.com
Firstranker's choice

Scales

1. Basic Information
2. Types and important units
3. Plain Scales (3 Problems)
4. Diagonal Scales - information
5. Diagonal Scales (3 Problems)
6. Vernier Scales - information
7. Vernier Scales (2 Problems)

All JNTU World

FirstRanker.com
Firstranker's choice
www.FirstRanker.com www.FirstRanker.com

SCALES

DIMENSIONS OF LARGE OBJECTS MUST BE REDUCED TO ACCOMMODATE ON STANDARD SIZE DRAWING SHEET.THIS REDUCTION CREATES A SCALE OF THAT REDUCTION RATIO, WHICH IS GENERALLY A FRACTION..

SUCH A SCALE IS CALLED REDUCING SCALE

AND

THAT RATIO IS CALLED REPRESENTATIVE FACTOR.

SIMILARLY IN CASE OF TINY OBJECTS DIMENSIONS MUST BE INCREASED FOR ABOVE PURPOSE. HENCE THIS SCALE IS CALLED ENLARGING SCALE.

HERE THE RATIO CALLED REPRESENTATIVE FACTOR IS MORE THAN UNITY.

FOR
R.
ME
& C

Other

1
1:1

USE FOLLOWING FORMULAS FOR THE CALCULATIONS IN THIS TOPIC.

A REPRESENTATIVE FACTOR (R.F.) = $\dfrac{\text{DIMENSION OF DRAWING}}{\text{DIMENSION OF OBJECT}}$

$= \dfrac{\text{LENGTH OF DRAWING}}{\text{ACTUAL LENGTH}}$

$= \sqrt{\dfrac{\text{AREA OF DRAWING}}{\text{ACTUAL AREA}}}$

$= \sqrt[3]{\dfrac{\text{VOLUME AS PER DRWG.}}{\text{ACTUAL VOLUME}}}$

B LENGTH OF SCALE = R.F. X MAX. LENGTH TO BE MEASURED.

www.FirstRanker.com
All JNTU World

FirstRanker.com
Firstranker's choice

BE FRIENDLY WITH THES

1 KILOMETRE = 10 HECTO
1 HECTOMETRE = 10 DECAM
1 DECAMETRE = 10 METRE
1 METRE = 10 DECIME
1 DECIMETRE = 10 CENTIM
1 CENTIMETRE = 10 MILIME

TYPES OF SCALES:

1. PLAIN SCALES (FOR DIMENSIONS UP TO SINGLE D
2. DIAGONAL SCALES (FOR DIMENSIONS UP TO TWO DEC
3. VERNIER SCALES (FOR DIMENSIONS UP TO TWO DEC
4. COMPARATIVE SCALES (FOR COMPARING TWO DIFFERENT
5. SCALE OF CORDS (FOR MEASURING/CONSTRUCTING

AllJNTU World

FirstRanker.com
Firstranker's choice
www.FirstRanker.com www.FirstRanker.com

PLAIN SCALE:-This type of scale represents two units or a unit and it's sub-divisi

PROBLEM NO.1:- Draw a scale 1 cm = 1m to read decimeters, to measure maximum dis
Show on it a distance of 4 m and 6 dm.

CONSTRUCTION:-

a) Calculate R.F.= $\frac{\text{DIMENSION OF DRAWING}}{\text{DIMENSION OF OBJECT}}$

R.F.= 1cm/ 1m = 1/100

Length of scale = R.F. X max. distance

= 1/100 X 600 cm

= 6 cms

b) Draw a line 6 cm long and divide it in 6 equal parts. Each part will represent larger divi
c) Sub divide the first part which will represent second unit or fraction of first unit.
d) Place (0) at the end of first unit. Number the units on right side of Zero and subdivisio on left-hand side of Zero. Take height of scale 5 to 10 mm for getting a look of scale.
e) After construction of scale mention it's RF and name of scale as shown.
f) Show the distance 4 m 6 dm on it as shown.

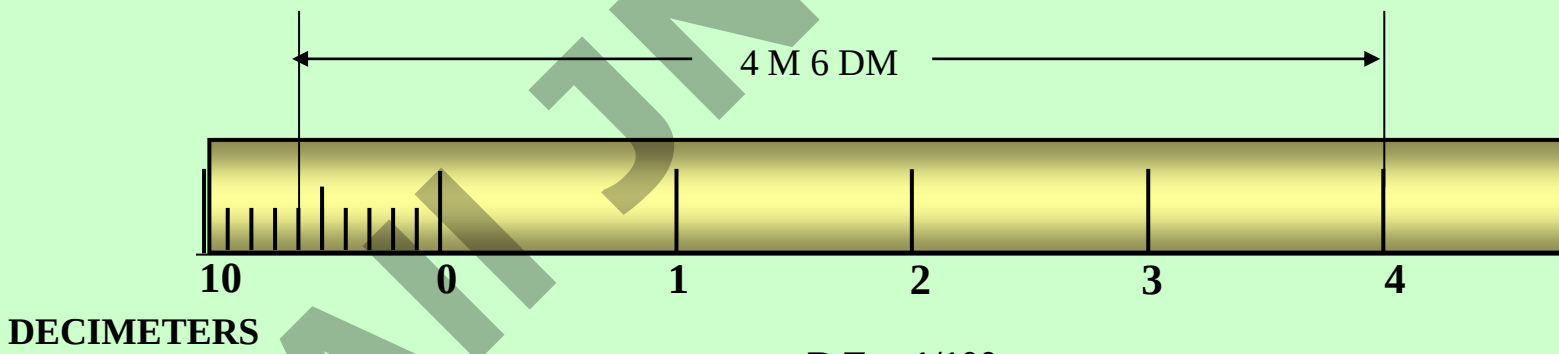

R.F. = 1/100

PLANE SCALE SHOWING METERS AND DECIMETERS.

www.FirstRanker.com
All JNTU World
PLAIN

FirstRanker.com
Firstranker's choice
www.FirstRanker.com www.FirstRanker.com

PROBLEM NO.2:- In a map a 36 km distance is shown by a line 45 cms long. Calculate the
a plain scale to read kilometers and hectometers, for max. 12 km. Show a distance of 8.3 km

CONSTRUCTION:-

a) Calculate R.F.

R.F.= 45 cm/ 36 km = 45/ 36 . 1000 . 100 = 1/ 80,000

Length of scale = R.F. × max. distance

= 1/ 80000 × 12 km

= 15 cm

b) Draw a line 15 cm long and divide it in 12 equal parts. Each part will represent larger divisi
c) Sub divide the first part which will represent second unit or fraction of first unit.
d) Place (0) at the end of first unit. Number the units on right side of Zero and subdivisions on left-hand side of Zero. Take height of scale 5 to 10 mm for getting a look of scale.
e) After construction of scale mention it's RF and name of scale as shown.
f) Show the distance 8.3 km on it as shown.

PLAIN

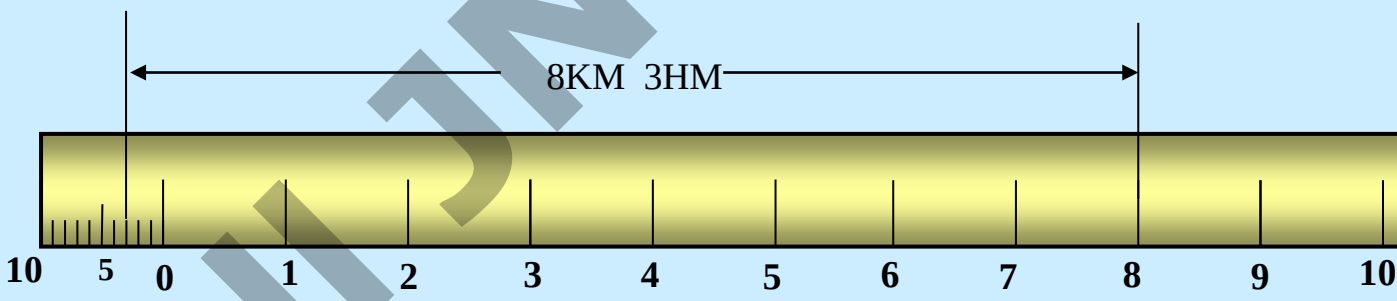

HECTOMETERS

R.F. = 1/80,000

PLANE SCALE SHOWING KILOMETERS AND HECTOMETERS

www.FirstRanker.com
All JNTU World

PROBLEM NO.3:- The distance between two stations is 210 km. A passenger train covers this in 7 hours. Construct a plain scale to measure time up to a single minute. RF is 1/200,000 Indic traveled by train in 29 minutes.

CONSTRUCTION:-

a) 210 km in 7 hours. Means speed of the train is 30 km per hour (60 minutes)

PLAIN

Length of scale = R.F. × max. distance per hour
= 1/ 2,00,000 × 30km
= 15 cm

b) 15 cm length will represent 30 km and 1 hour i.e. 60 minutes.
Draw a line 15 cm long and divide it in 6 equal parts. Each part will represent 5 km and 10 m

c) Sub divide the first part in 10 equal parts,which will represent second unit or fraction of first u
Each smaller part will represent distance traveled in one minute.

d) Place (0) at the end of first unit. Number the units on right side of Zero and subdivisions on left-hand side of Zero. Take height of scale 5 to 10 mm for getting a proper look of scale.

e) Show km on upper side and time in minutes on lower side of the scale as shown.
After construction of scale mention it's RF and name of scale as shown.

f) Show the distance traveled in 29 minutes, which is 14.5 km, on it as shown.

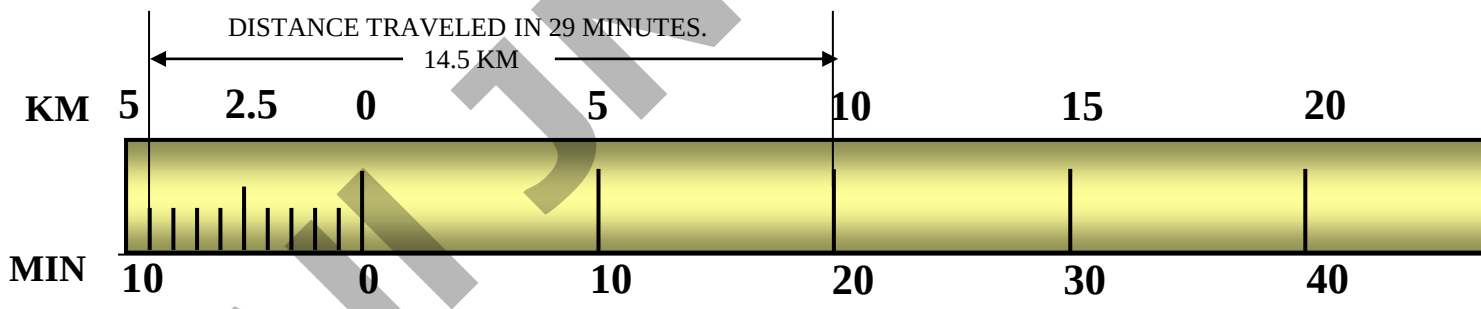

R.F. = 1/100

PLANE SCALE SHOWING METERS AND DECIMETERS.

All JNTU World

We have seen that the plain scales give only two dimensions, such as a unit and it's subunit or it's fraction.

The diagonal scales give us three successive dimensions that is a unit, a subunit and a subdivision of a subunit.

The principle of construction of a diagonal scale is as follows.
Let the XY in figure be a subunit.
From Y draw a perpendicular YZ to a suitable height.
Join XZ. Divide YZ in to 10 equal parts.
Draw parallel lines to XY from all these divisions and number them as shown.
From geometry we know that similar triangles have their like sides proportional.

Consider two similar triangles XYZ and 7' 7Z,
we have 7Z / YZ = 7'7 / XY (each part being one unit)
Means 7' 7 = 7 / 10. x X Y = 0.7 XY
:.
Similarly
1' – 1 = 0.1 XY
2' – 2 = 0.2 XY
Thus, it is very clear that, the sides of small triangles, which are parallel to divided lines, become progressively shorter in length by 0.1 XY.

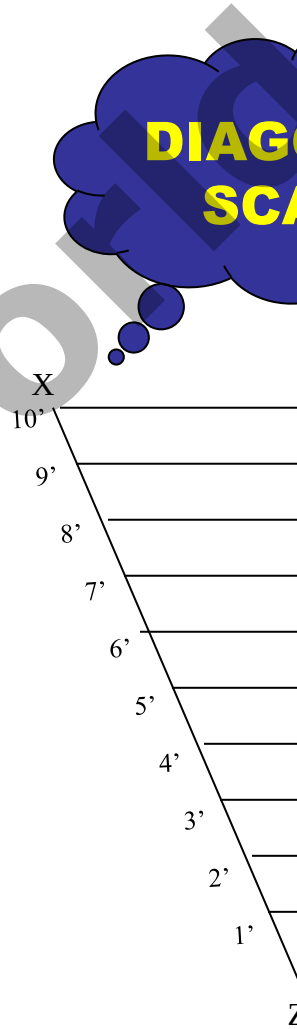

The solved examples ON NEXT PAGES will make the principles of diagonal scales clear.

All JNTU World

FirstRanker.com
Firstranker's choice
www.FirstRanker.com www.FirstRanker.com

PROBLEM NO. 4 : The distance between Delhi and Agra is 200 km.
In a railway map it is represented by a line 5 cm long. Find it's R.F.
Draw a diagonal scale to show single km. And maximum 600 km.
Indicate on it following distances. 1) 222 km 2) 336 km 3) 459 km 4) 569 km

SOLUTION STEPS: RF = 5 cm / 200 km = 1 / 40, 00, 000
Length of scale = 1 / 40, 00, 000 X 600 X 10^5 = 15 cm

Draw a line 15 cm long. It will represent 600 km.Divide it in six equal parts.(each will represent 1
Divide first division in ten equal parts.Each will represent 10 km.**Draw** a line upward from left end
mark 10 parts on it of any distance. **Name** those parts 0 to 10 as shown.Join 9th sub-division of ho
with 10th division of the vertical divisions. **Then** draw parallel lines to this line from remaining sub
complete diagonal scale.

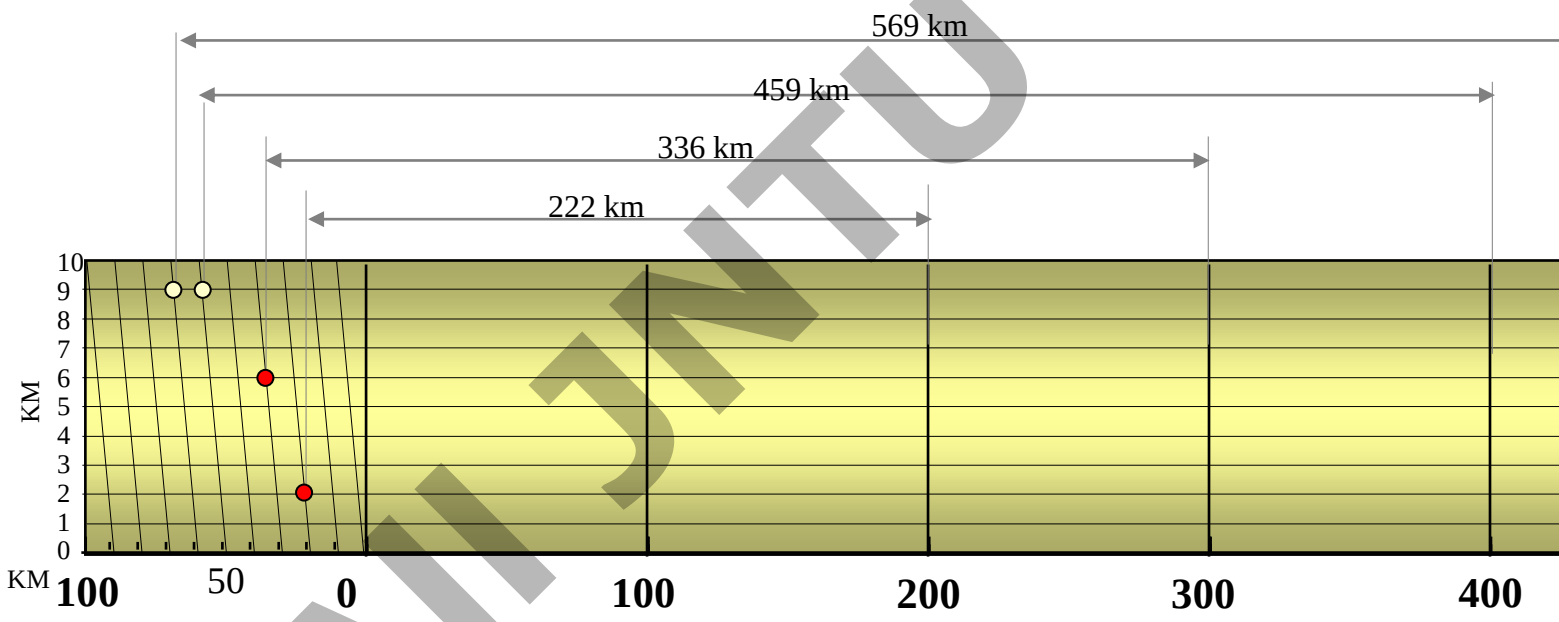

R.F. = 1 / 40,00,000

DIAGONAL SCALE SHOWING KILOMETERS.

www.FirstRanker.com
All JNTU World

FirstRanker.com
Firstranker's choice
www.FirstRanker.com www.FirstRanker.com

PROBLEM NO.5: A rectangular plot of land measuring 1.28 hectors is represented on a map by a sim
of 8 sq. cm. Calculate RF of the scale. Draw a diagonal scale to read single meter. Show a distance of 4

SOLUTION :

1 hector = 10, 000 sq. meters

1.28 hectors = 1.28 X 10, 000 sq. meters

$= 1.28 \times 10^4 \times 10^4$ sq. cm

8 sq. cm area on map represents

$= 1.28 \times 10^4 \times 10^4$ sq. cm on land

1 cm sq. on map represents

$= 1.28 \times 10^4 \times 10^4 / 8$ sq cm on land

1 cm on map represent

$$= \sqrt{1.28 \times 10^4 \times 10^4 / 8} \quad \text{cm}$$

= 4, 000 cm

1 cm on drawing represent 4, 000 cm, Means RF = 1 / 4000

Assuming length of scale 15 cm, it will represent 600 m.

Draw a line 15 cm long.
It will represent 600 m.Divide it in six equal parts
(each will represent 100 m.)
Divide first division in ten equal parts.Each will
represent 10 m.
Draw a line upward from left end and
mark 10 parts on it of any distance.
Name those parts 0 to 10 as shown.Join 9th sub-
of horizontal scale with 10th division of the vertica
Then draw parallel lines to this line from remaini
and complete diagonal scale.

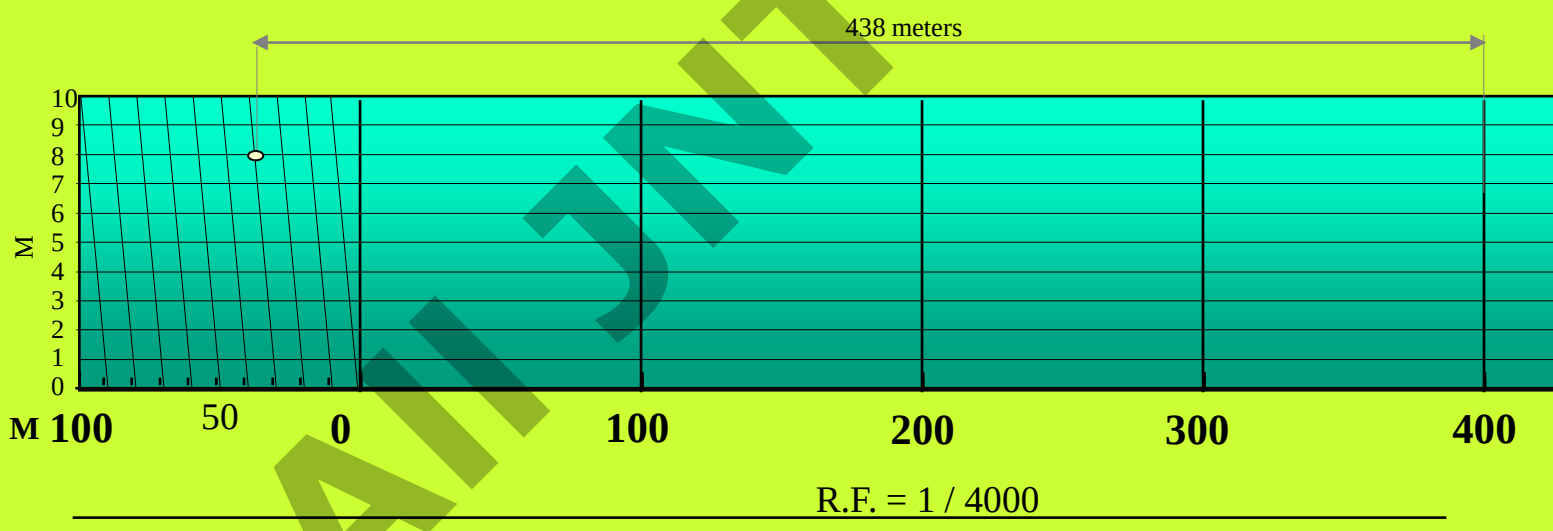

DIAGONAL SCALE SHOWING METERS.

www.FirstRanker.com
All JNTU World

FirstRanker.com
Firstranker's choice
www.FirstRanker.com www.FirstRanker.com

PROBLEM NO.6:. Draw a diagonal scale of R.F. 1: 2.5, showing centimeters and millimeters and long enough to measure up to 20 centimeters.

SOLUTION STEPS:

R.F. = 1 / 2.5

Length of scale = 1 / 2.5 X 20 cm.

= 8 cm.

1. Draw a line 8 cm long and divide it in to 4 equal parts. (Each part will represent a length of 5 cm.)
2. Divide the first part into 5 equal divisions. (Each will show 1 cm.)
3. At the left hand end of the line, draw a vertical line and on it step-off 10 equal divisions of any length.
4. Complete the scale as explained in previous problems. Show the distance 13.4 cm on it.

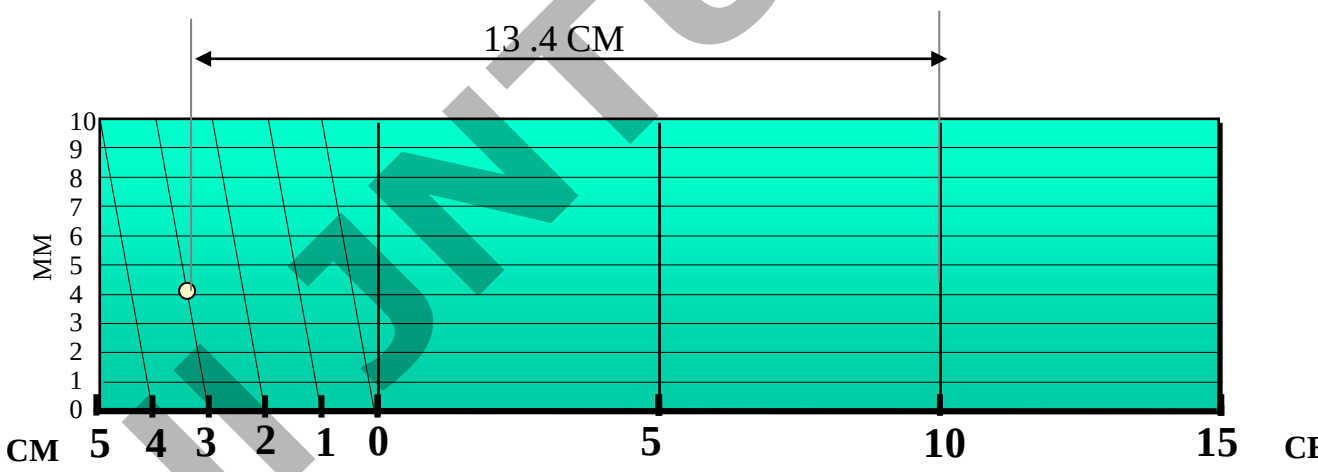

R.F. = 1 / 2.5

DIAGONAL SCALE SHOWING CENTIMETERS.

www.FirstRanker.com
All JNTU World

Vernier Scales:

These scales, like diagonal scales , are used to read to a very small unit with great accuracy
It consists of two parts – a primary scale and a vernier. The primary scale is a plain scale ful
divided into minor divisions.
As it would be difficult to sub-divide the minor divisions in ordinary way, it is done with the he
The graduations on vernier are derived from those on the primary scale.

Figure to the right shows a part of a plain scale in which length A-O represents 10 cm. If we divide A-O into ten equal parts, each will be of 1 cm. Now it would not be easy to divide each of these parts into ten equal divisions to get measurements in millimeters.

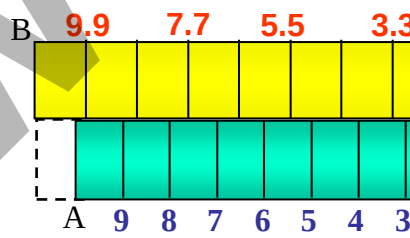

Now if we take a length BO equal to 10 + 1 = 11 such equal parts, thus representing 11 cm, and divide it into ten equal divisions, each of these divisions will represent 11 / 10 – 1.1 cm.

The difference between one part of AO and one division of BO will be equal 1.1 – 1.0 = 0.1 cm or 1 mm.
This difference is called Least Count of the scale.
Minimum this distance can be measured by this scale.
The upper scale BO is the vernier.The combination of plain scale and the vernier is vernier scale.

All JNTU World

Example 10:
Draw a vernier scale of RF = 1 / 25 to read centimeters upto 4 meters and on it, show lengths 2.39 m and 0.91 m

Vernier

SOLUTION:
Length of scale = RF X max. Distance
= 1 / 25 X 4 X 100
= 16 cm

CONSTRUCTION: ***(Main scale)***
Draw a line 16 cm long.
Divide it in 4 equal parts.
(each will represent meter)
Sub-divide each part in 10 equal parts.
(each will represent decimeter)
Name those properly.

CONSTRUCTION: ***(vernier)***
Take 11 parts of Dm length and divide it in 10 equal pa
Each will show 0.11 m or 1.1 dm or 11 cm and construc
Covering these parts of vernier.

TO MEASURE GIVEN LENGTHS:
(1) For 2.39 m : Subtract 0.99 from 2.39 i.e. 2.39 -
The distance between 0.99 (left of Zero) and 1.4 (righ
(2) For 0.91 m : Subtract 0.11 from 0.91 i.e. 0.91 – 0.1
The distance between 0.11 and 0.80 (both left side of

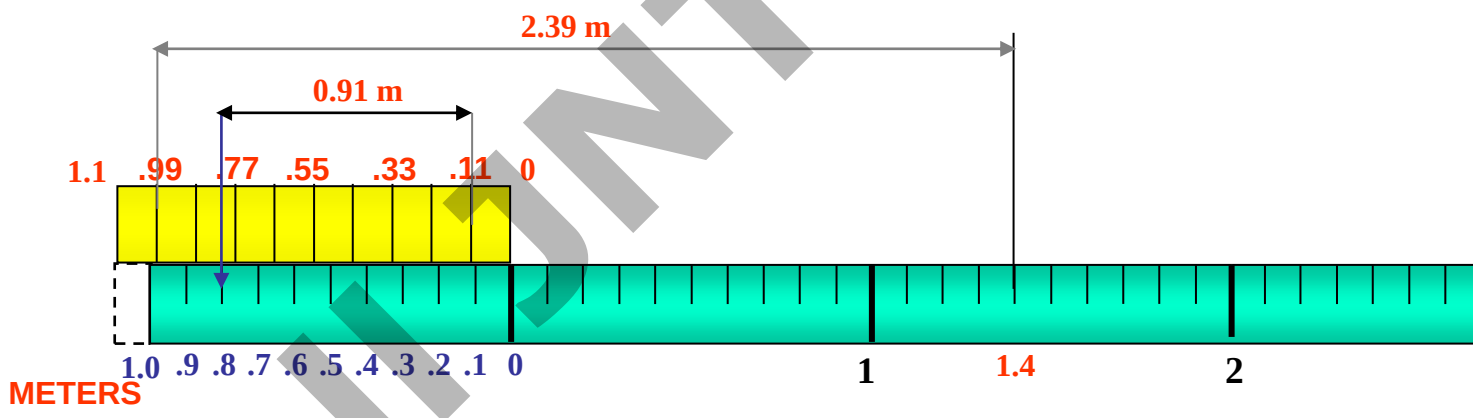

All JNTU World

Example 11: A map of size 500cm X 50cm wide represents an area of 6250 sq.Kms. Construct a vernier scaleto measure kilometers, hectometers and decameters and long enough to measure upto 7 km. Indicate on it a) 5.33 km b) 59 decameters.

Ver

SOLUTION:

$$RF = \sqrt{\frac{\text{AREA OF DRAWING}}{\text{ACTUAL AREA}}}$$

$$= \sqrt{\frac{\text{500 X 50 cm sq.}}{\text{6250 km sq.}}}$$

$$= 2 / 10^5$$

Length of scale = RF X max. Distance

$= 2 / 10^5$ X 7 kms

= 14 cm

CONSTRUCTION: ***(Main scale)***

Draw a line 14 cm long.
Divide it in 7 equal parts.
(each will represent km)
Sub-divide each part in 10 equal parts.
(each will represent hectometer)
Name those properly.

CONSTRUCTION: ***(vernier)***

Take 11 parts of hectometer part length and divide it in 10 equal parts.
Each will show 1.1 hm m or 11 dm and Covering in a rectangle complete scale.

TO MEASURE

a) For 5.33 km
Subtract 0.33
i.e. 5.33 - 0.33
The distance b
(left of Zero) a
5.00 (right of Z
(b) For 59 dm
Subtract 0.99 f
i.e. 0.59 – 0.9
(- ve sign mea
The distance
- .4 km is 59
(both left side

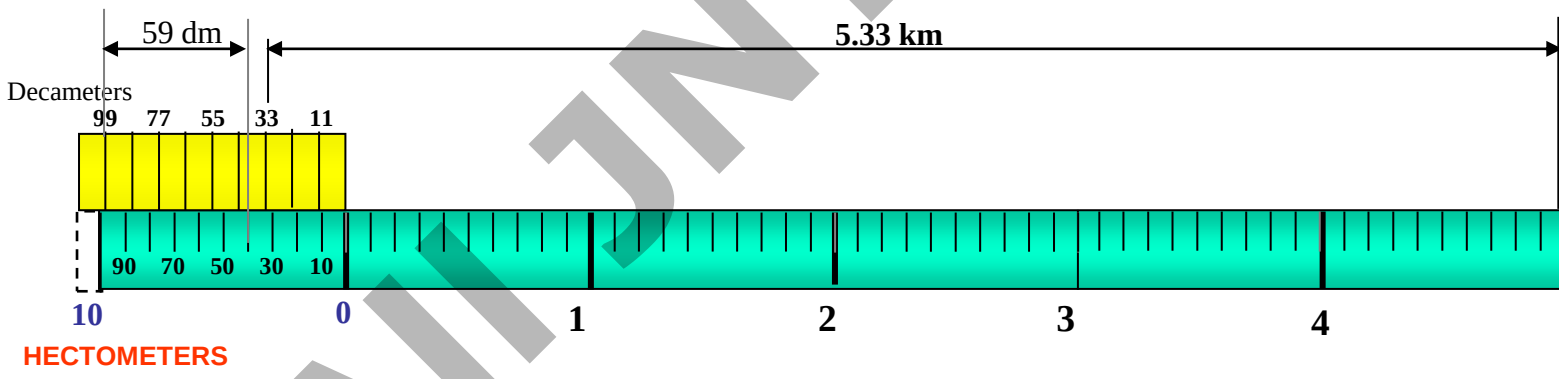

All JNTU World

FirstRanker.com
Firstranker's choice
www.FirstRanker.com www.FirstRanker.com

ENGINEERING CURVES

Part- I {Conic Sections}

ELLIPSE

1.Concentric Circle Method

2.Rectangle Method

3.Oblong Method

4.Arcs of Circle Method

5.Rhombus Metho

6.Basic Locus Method
(Directrix – focus)

PARABOLA

1.Rectangle Method

2 Method of Tangents
(Triangle Method)

3.Basic Locus Method
(Directrix – focus)

HYPERBOLA

1.Rectangular Hypo
(coordinates given

2 Rectangular Hypo
(P-V diagram - Eq

3.Basic Locus Meth
(Directrix – focus)

Methods of Drawin
Tangents & Norma
To These Curves.

All JNTU World

www.FirstRanker.com

FirstRanker.com
Firstranker's choice
www.FirstRanker.com www.FirstRanker.com

CONIC SECTIONS

ELLIPSE, PARABOLA AND HYPERBOLA ARE CALLED CONIC SEC
BECAUSE
THESE CURVES APPEAR ON THE SURFACE OF A CONE WHEN IT IS CUT BY SOME TYPICAL CUTTING PLANES.

OBSERVE ILLUSTRATIONS GIVEN BELOW..

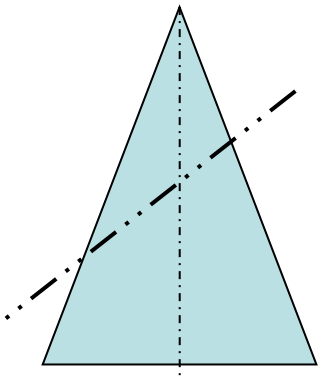

Section Plane Through Generators

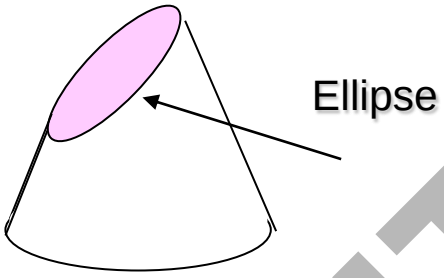

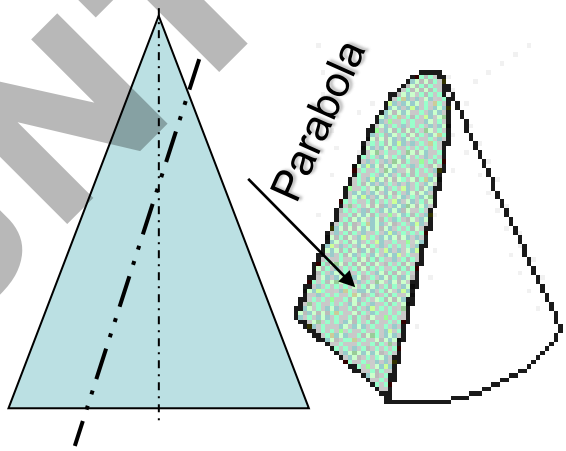

Section Plane Parallel to end generator.

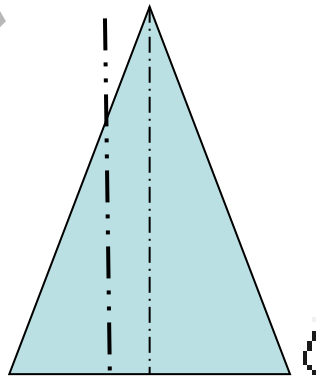

Section Plane Parallel to Axis.

All JNTU World

www.FirstRanker.com

FirstRanker.com
Firstranker's choice
www.FirstRanker.com www.FirstRanker.com

COMMON DEFINATION OF ELLIPSE, PARABOLA & HYP

These are the loci of points moving in a plane such that the ratio of it'
from a ***fixed point*** And a ***fixed line*** always remains constan
The Ratio is called **ECCENTRICITY. (E)**

A) For Ellipse E<1
B) For Parabola E=1
C) For Hyperbola E>1

Refer Problem nos. 6. 9 & 12

SECOND DEFINATION OF AN ELLIPSE:-

It is a locus of a point moving in a plane
such that the SUM of it's distances from TWO fixed po
always remains constant.
{And this ***sum equals*** to the length of ***major axis***.}
These TWO fixed points are FOCUS 1 & FOCUS 2

Refer Problem no.4
Ellipse by Arcs of Circles Method.

www.FirstRanker.com
All JNTU World

FirstRanker.com
Firstranker's choice
www.FirstRanker.com www.FirstRanker.com

Draw an ellipse by general method, given distance of focus from directrix 65mm and eccentricity ¾.

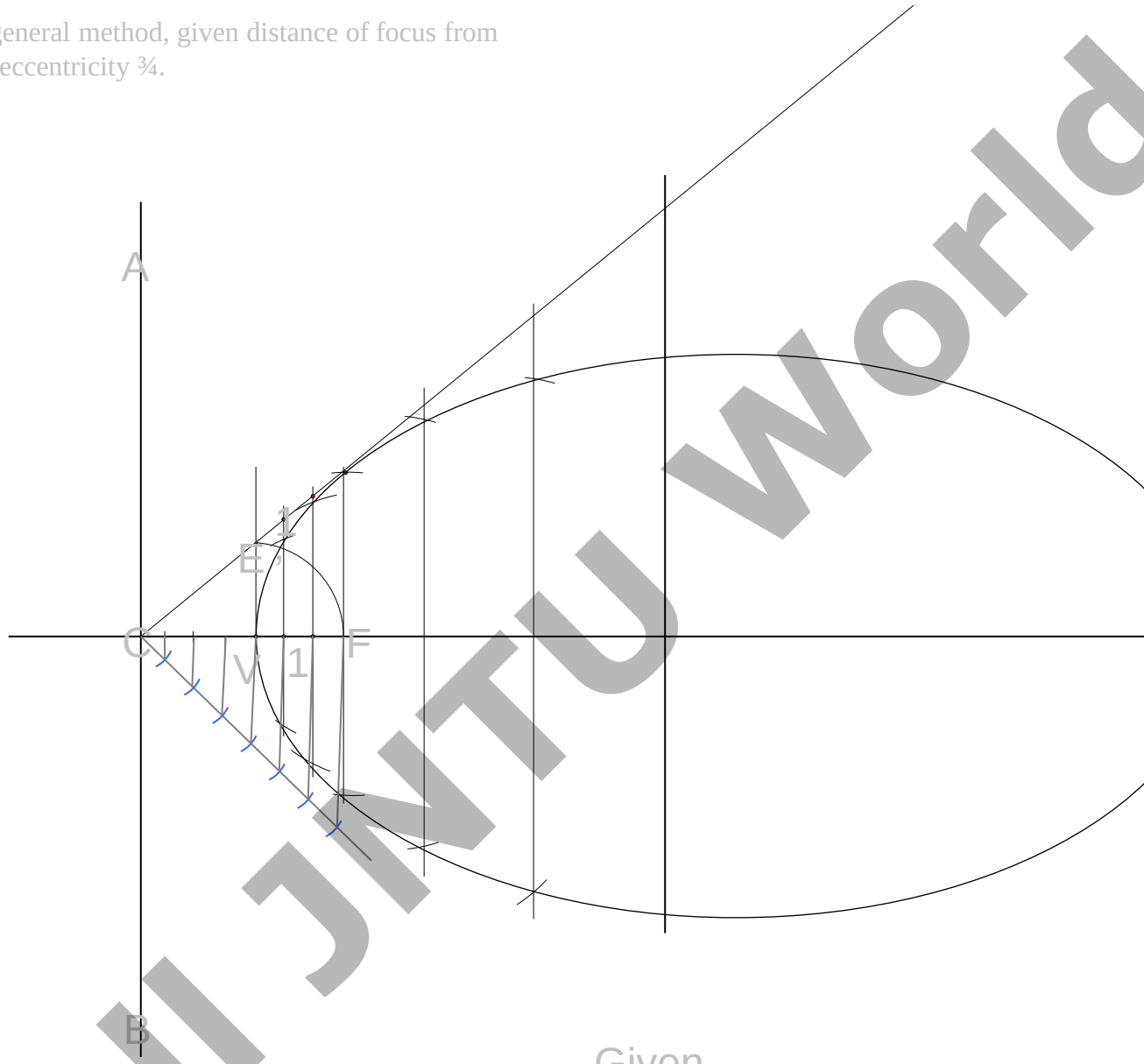

Given
CF=65mm
Given eccentricity=3/4.
Therefore divide CF in 7 equal parts and mark V at 3rd division from F

All JNTU World

www.FirstRanker.com

FirstRanker.com
Firstranker's choice

ELLI

BY CONCENTRIC

Problem 1 :-

Draw ellipse by **concentric circle method**.

Take major axis 100 mm and minor axis 70 mm long.

Steps:

1. Draw both axes as perpendicular bisectors of each other & name their ends as shown.
2. Taking their intersecting point as a center, draw two concentric circles considering both as respective diameters.
3. Divide both circles in 12 equal parts & name as shown.
4. From all points of outer circle draw vertical lines downwards and upwards respectively.
5. From all points of inner circle draw horizontal lines to intersect those vertical lines.
6. Mark all intersecting points properly as those are the points on ellipse.
7. Join all these points along with the ends of both axes in smooth possible curve. It is required ellipse.

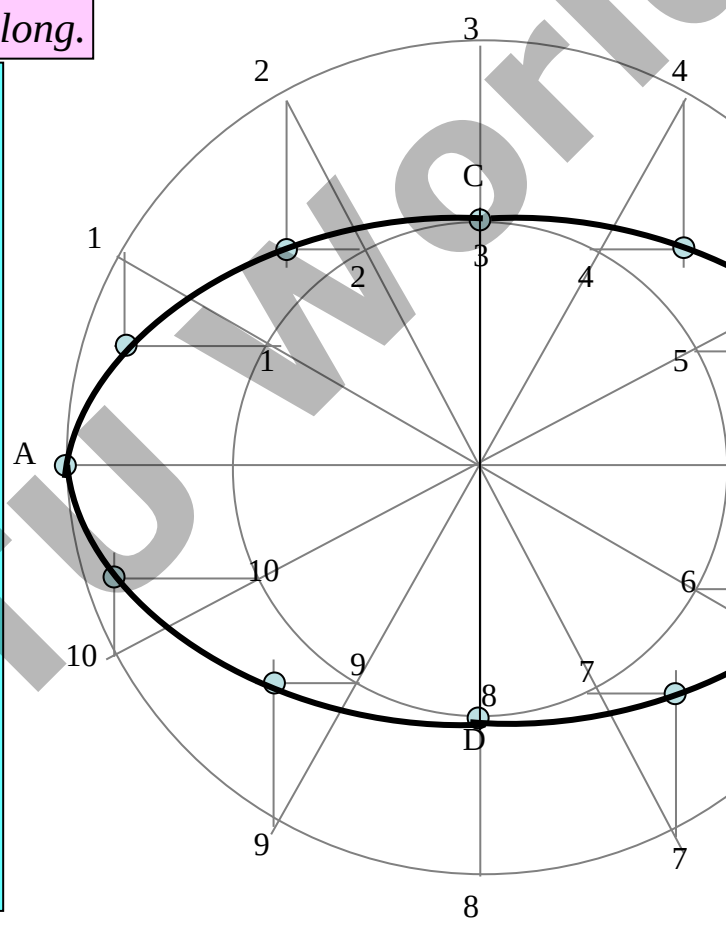

All JNTU World

FirstRanker.com
Firstranker's choice

Steps:

1 Draw a rectangle taking major and minor axes as sides.

2. In this rectangle draw both axes as perpendicular bisectors of each other..

3. For construction, select upper left part of rectangle. Divide vertical small side and horizontal long side into same number of equal parts.(here divided in four parts)

4. Name those as shown..

5. Now join all vertical points 1,2,3,4, to the upper end of minor axis. And all horizontal points i.e.1,2,3,4 to the lower end of minor axis.

6. Then extend C-1 line upto D-1 and mark that point. Similarly extend C-2, C-3, C-4 lines up to D-2, D-3, & D-4 lines.

7. Mark all these points properly and join all along with ends A and D in smooth possible curve. Do similar construction in right side part.along with lower half of the rectangle.Join all points in smooth curve.

It is required ellipse.

BY RECT

Problem 2

Draw ellipse by **Rectangle** *method.*

Take major axis 100 mm and minor axis 70 mm

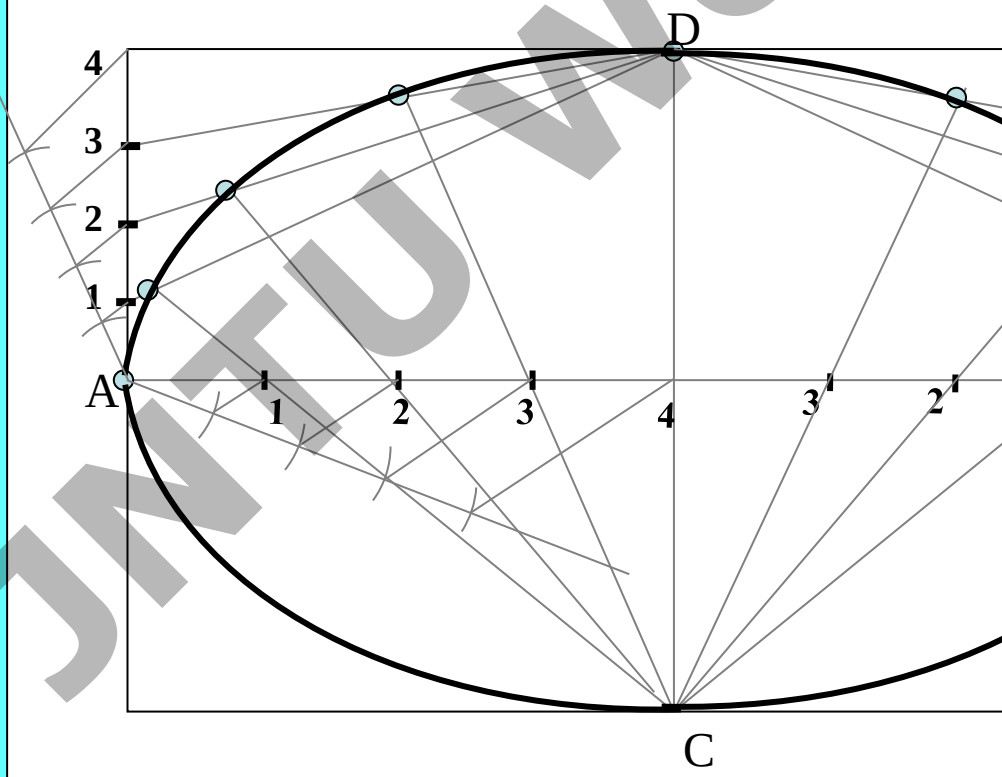

All JNTU World

FirstRanker.com
Firstranker's choice
www.FirstRanker.com www.FirstRanker.com

Problem 3:-

Draw ellipse by **Oblong method.**

Draw a parallelogram of 100 mm and 70 mm long sides with included angle of 75^0. Inscribe Ellipse in it.

STEPS ARE SIMILAR TO THE PREVIOUS CASE (RECTANGLE METHOD) ONLY IN PLACE OF RECTANGLE, HERE IS A PARALLELOGRAM.

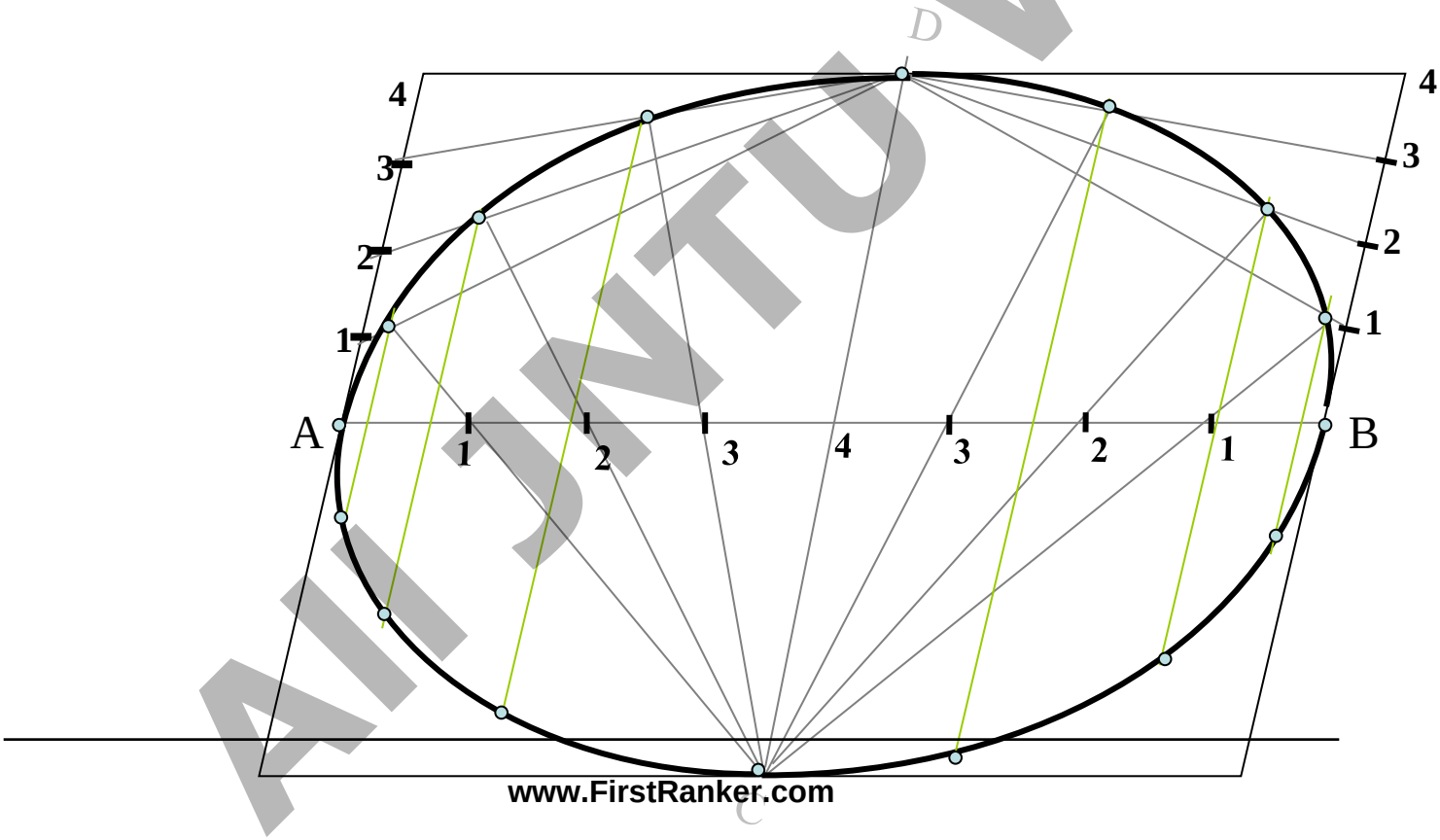

BY C
All JNTU World

www.FirstRanker.com

FirstRanker.com
Firstranker's choice
www.FirstRanker.com www.FirstRanker.com

PROBLEM 4.
MAJOR AXIS AB & MINOR AXIS CD ARE 100 AMD 70MM LONG RESPECTIVELY .DRAW ELLIPSE BY ARCS OF CIRLES METHOD.

STEPS:
1. Draw both axes as usual.Name the ends & intersecting point
2. Taking AO distance I.e.half major axis, from C, mark F_1 & F_2 On AB . (focus 1 and 2.)
3. On line F_1- O taking any distance, mark points 1,2,3, & 4
4. Taking F_1 center, with distance A-1 draw an arc above AB and taking F_2 center, with B-1 distance cut this arc. Name the point p_1
5. Repeat this step with same centers but taking now A-2 & B-2 distances for drawing arcs. Name the point p_2
6. Similarly get all other P points. With same steps positions of P can be located below AB.
7. Join all points by smooth curve to get an ellipse/

ELL
BY ARCS OF

As per the definition Ellipse is locus of point a plane such that the SUM of it's distances fr points (F_1 & F_2) remains constant and equals t of major axis AB.(Note A .1+ B .1=A . 2 + B. 2 =

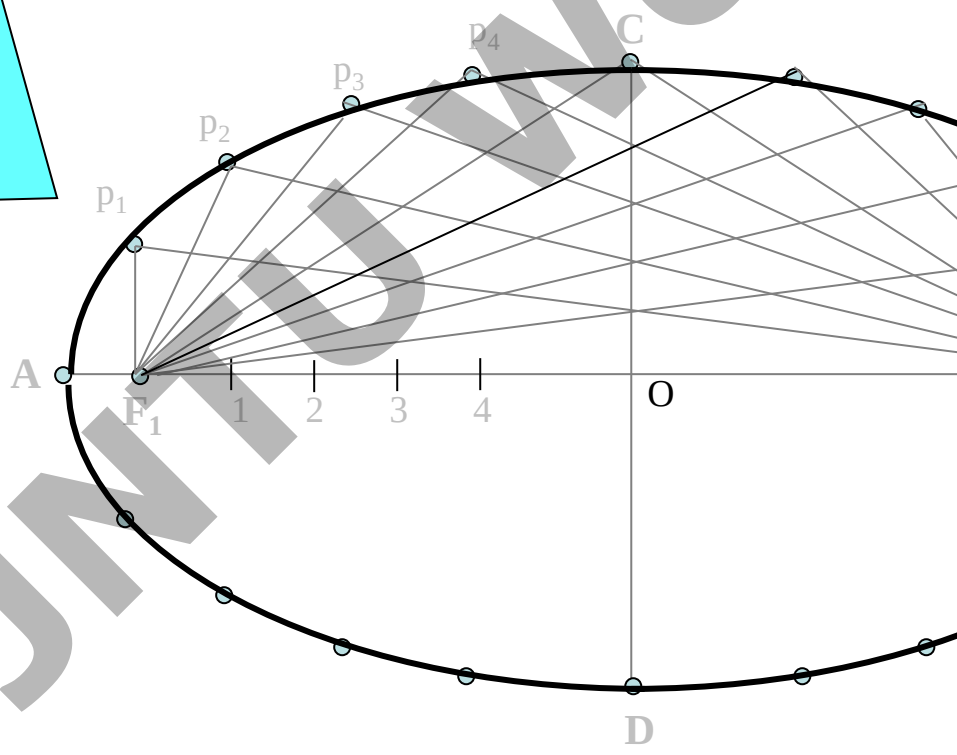

All JNTU World

www.FirstRanker.com

PROBLEM 5.
DRAW RHOMBUS OF 100 MM & 70 MM LONG DIAGONALS AND INSCRIBE AN ELLIPSE IN IT.

STEPS:
1. Draw rhombus of given dimensions.
2. Mark mid points of all sides & name Those A,B,C,& D
3. Join these points to the ends of smaller diagonals.
4. Mark points 1,2,3,4 as four centers.
5. Taking 1 as center and 1-A radius draw an arc AB.
6. Take 2 as center draw an arc CD.
7. Similarly taking 3 & 4 as centers and 3-D radius draw arcs DA & BC.

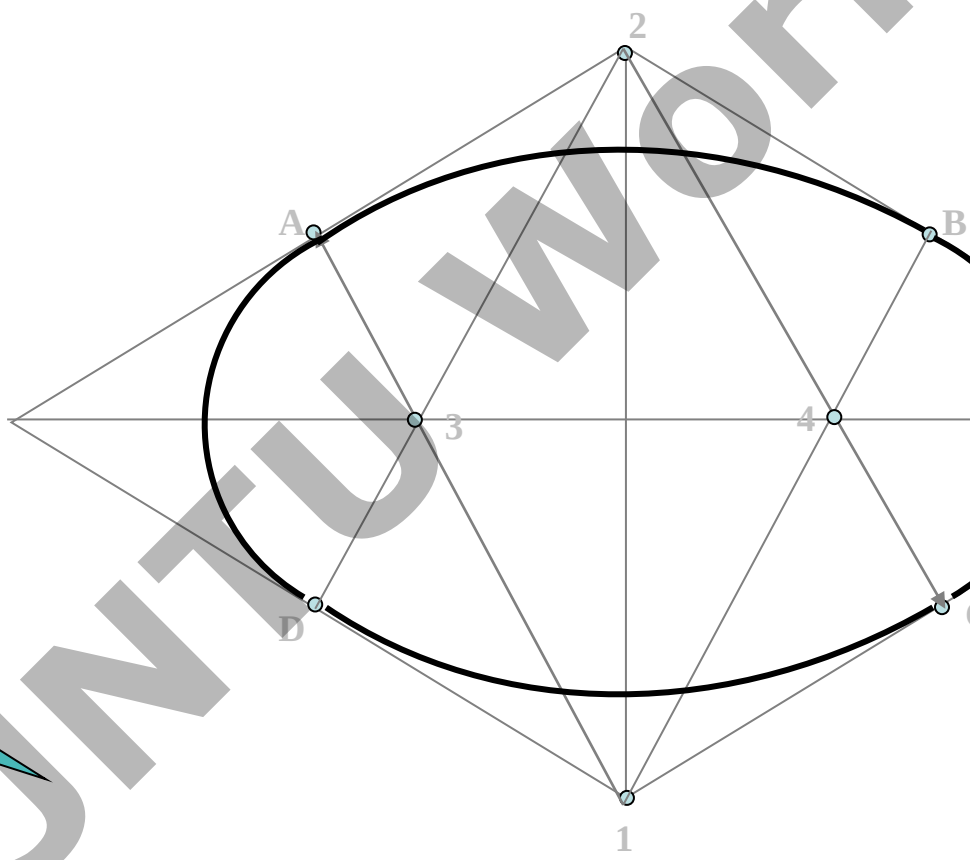

BY RH
All JNTU World

PROBLEM 6*:-** POINT **F** IS 50 MM FROM A LINE **AB.**A POINT **P** IS MOVING IN A PLANE SUCH THAT THE ***RATIO OF IT'S DISTANCES FROM **F** AND LINE **AB** REMAINS CONSTANT AND EQUALS TO **2/3** DRAW LOCUS OF POINT **P.** **{ ECCENTRICITY = 2/3 }**

STEPS:

1 .Draw a vertical line AB and point F 50 mm from it.
2 .Divide 50 mm distance in 5 parts.
3 .Name 2nd part from F as V. It is 20mm and 30mm from F and AB line resp. It is first point giving ratio of it's distances from F and AB 2/3 i.e 20/30
4 Form more points giving same ratio such as 30/45, 40/60, 50/75 etc.
5.Taking 45,60 and 75mm distances from line AB, draw three vertical lines to the right side of it.
6. Now with 30, 40 and 50mm distances in compass cut these lines above and below, with F as center.
7. Join these points through V in smooth curve.

This is required locus of P.It is an ELLIPSE.

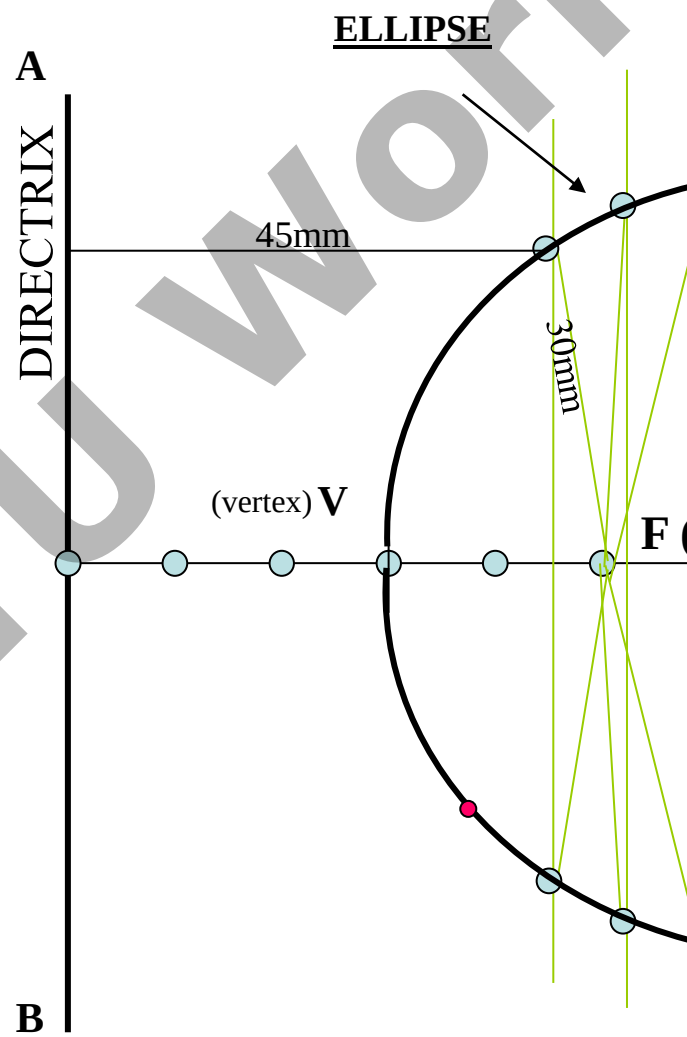

All JNTU World

FirstRanker.com
Firstranker's choice
www.FirstRanker.com www.FirstRanker.com

PROBLEM 7: A BALL THROWN IN AIR ATTAINS 100 M HIEGHT AND COVERS HORIZONTAL DISTANCE 150 M ON GROUND. Draw the path of the ball (projectile)-

PARA
RECTANGI

STEPS:
1.Draw rectangle of above size and divide it in two equal vertical parts
2.Consider left part for construction. Divide height and length in equal number of parts and name those 1,2,3,4,5& 6
3.Join vertical 1,2,3,4,5 & 6 to the top center of rectangle
4.Similarly draw upward vertical lines from horizontal1,2,3,4,5 And wherever these lines intersect previously drawn inclined lines in sequence Mark those points and further join in smooth possible curve.
5.Repeat the construction on right side rectangle also.Join all in sequence.
This locus is Parabola.
.

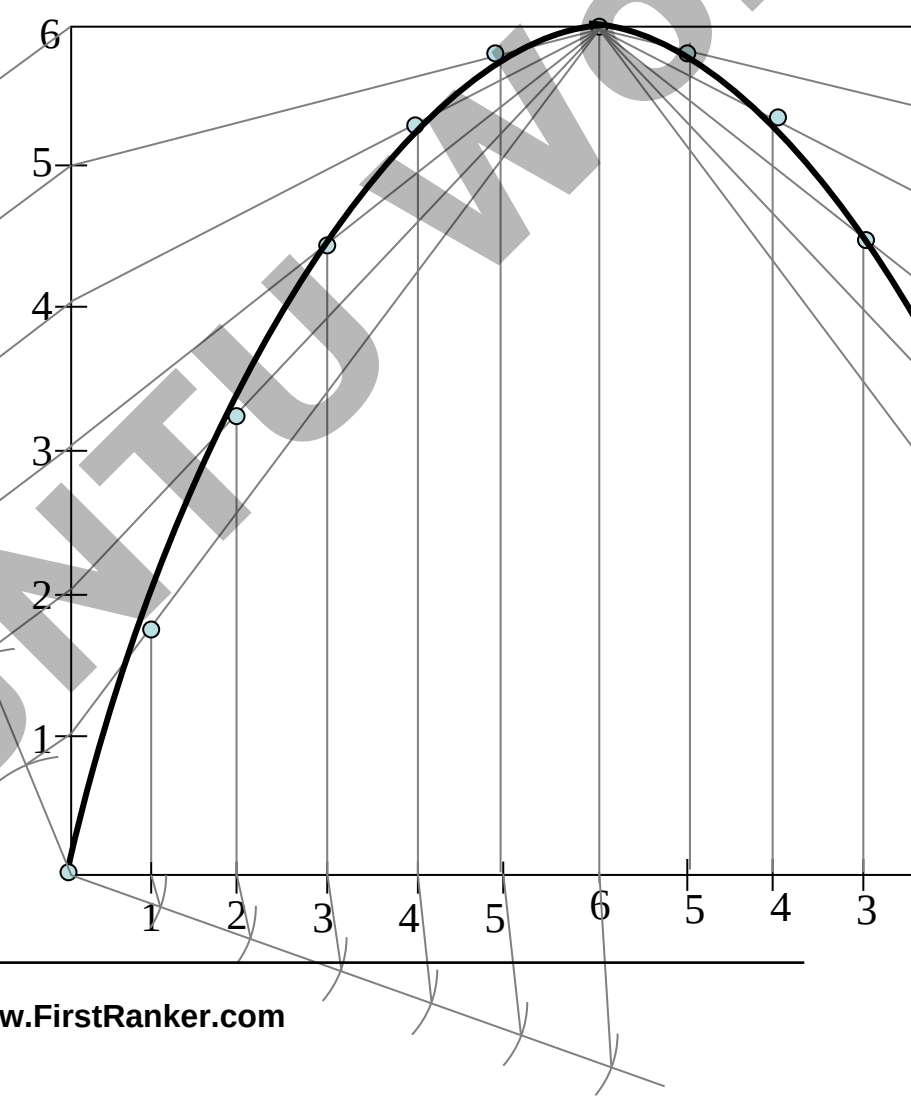

All JNTU World

www.FirstRanker.com

FirstRanker.com
Firstranker's choice
www.FirstRanker.com www.FirstRanker.com

Draw a parabola by tangent method given base 7.5m and axis 4.5m

Take scale 1cm

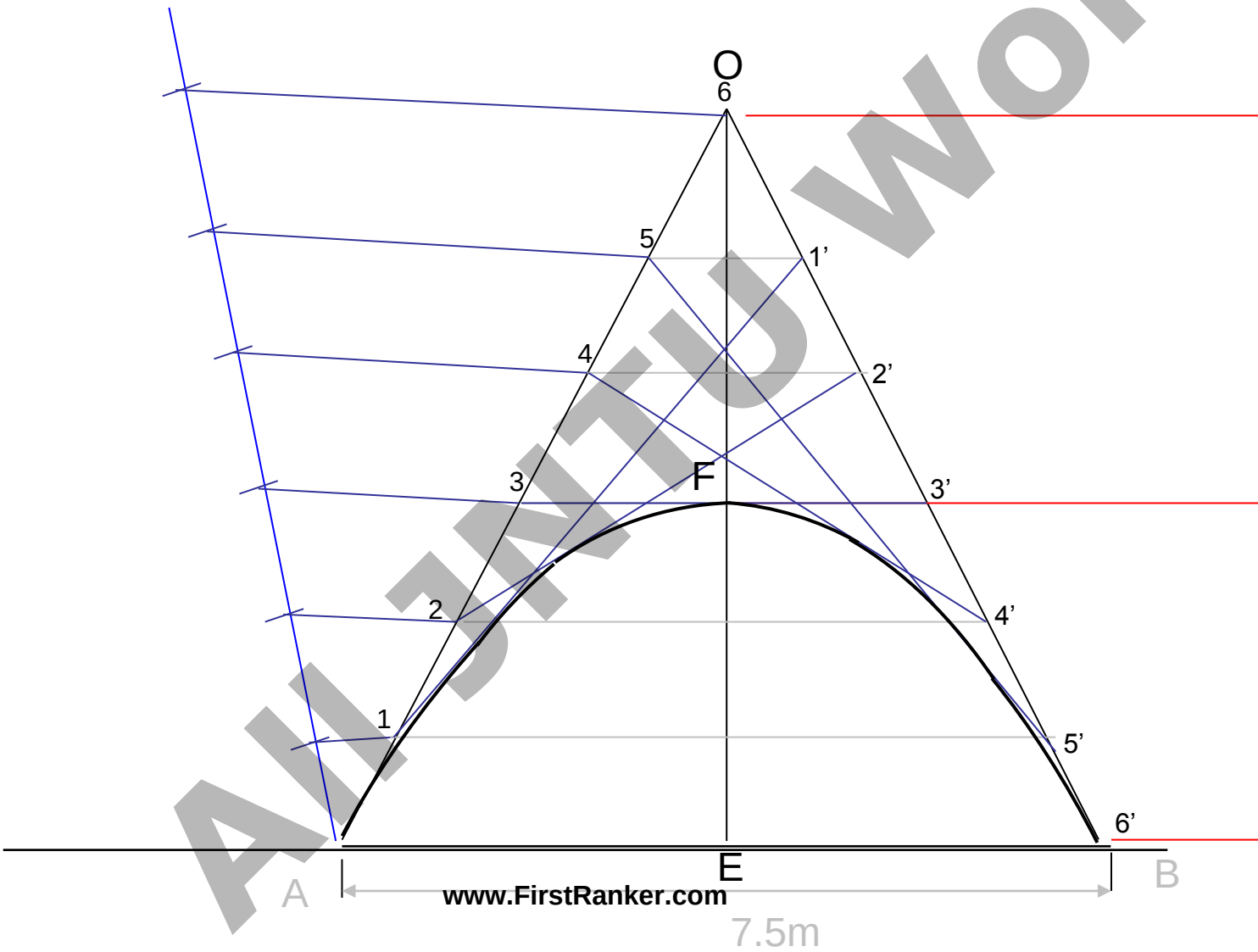

All JNTU World
www.FirstRanker.com

PROBLEM 9: Point F is 50 mm from a vertical straight line AB. Draw locus of point P, moving in a plane such that it always remains equidistant from point F and line AB.

SOLUTION STEPS:

1. Locate center of line, perpendicular to AB from point F. This will be initial point P and also the vertex.
2. Mark 5 mm distance to its right side, name those points 1,2,3,4 and from those draw lines parallel to AB.
3. Mark 5 mm distance to its left of P and name it 1.
4. Take O-1 distance as radius and F as center draw an arc cutting first parallel line to AB. Name upper point P_1 and lower point P_2. (FP_1=O1)
5. Similarly repeat this process by taking again 5mm to right and left and locate P_3P_4.
6. Join all these points in smooth curve.

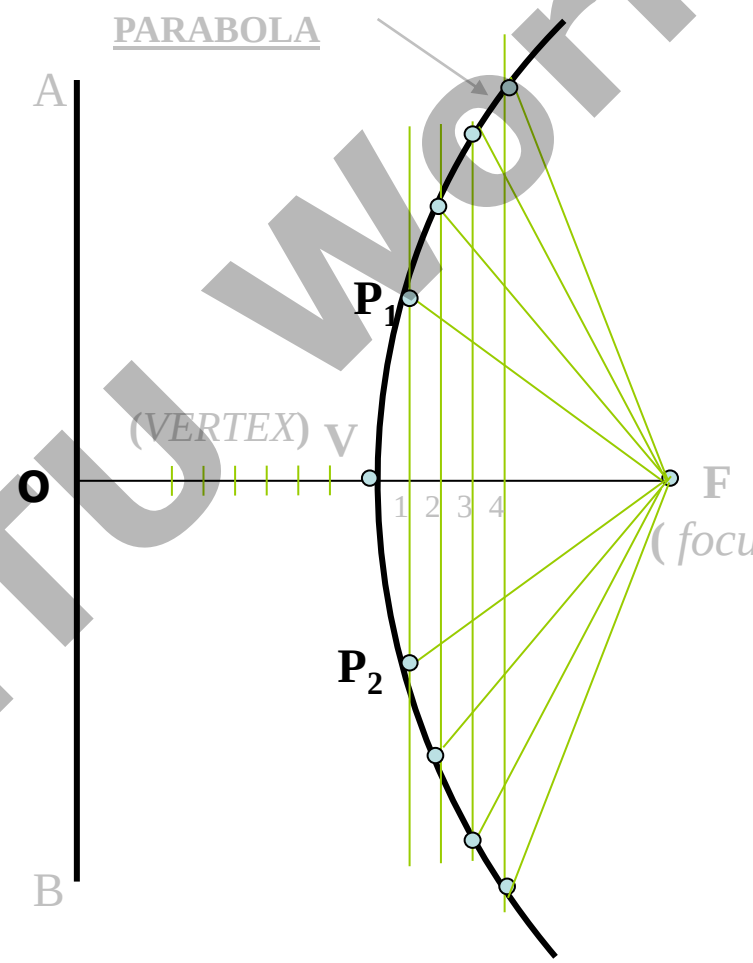

It will be the locus of P equidistance from line AB and fixed point F.

All JNTU World

Problem No.10: Point P is 40 mm and 30 mm from horizontal and vertical axes respectively.Draw Hyperbola through it.

HYPE
THROUG
OF KNOWN C

Solution Steps:

1) Extend horizontal line from P to right side.
2) Extend vertical line from P upward.
3) On horizontal line from P, mark some points taking any distance and name them after P-1, 2,3,4 etc.
4) Join 1-2-3-4 points to pole O. Let them cut part [P-B] also at 1,2,3,4 points.
5) From horizontal 1,2,3,4 draw vertical lines downwards and
6) From vertical 1,2,3,4 points [from P-B] draw horizontal lines.
7) Line from 1 horizontal and line from 1 vertical will meet at P_1.Similarly mark P_2, P_3, P_4 points.
8) Repeat the procedure by marking four points on upward vertical line from P and joining all those to pole O. Name this points P_6, P_7, P_8 etc. and join them by smooth curve.

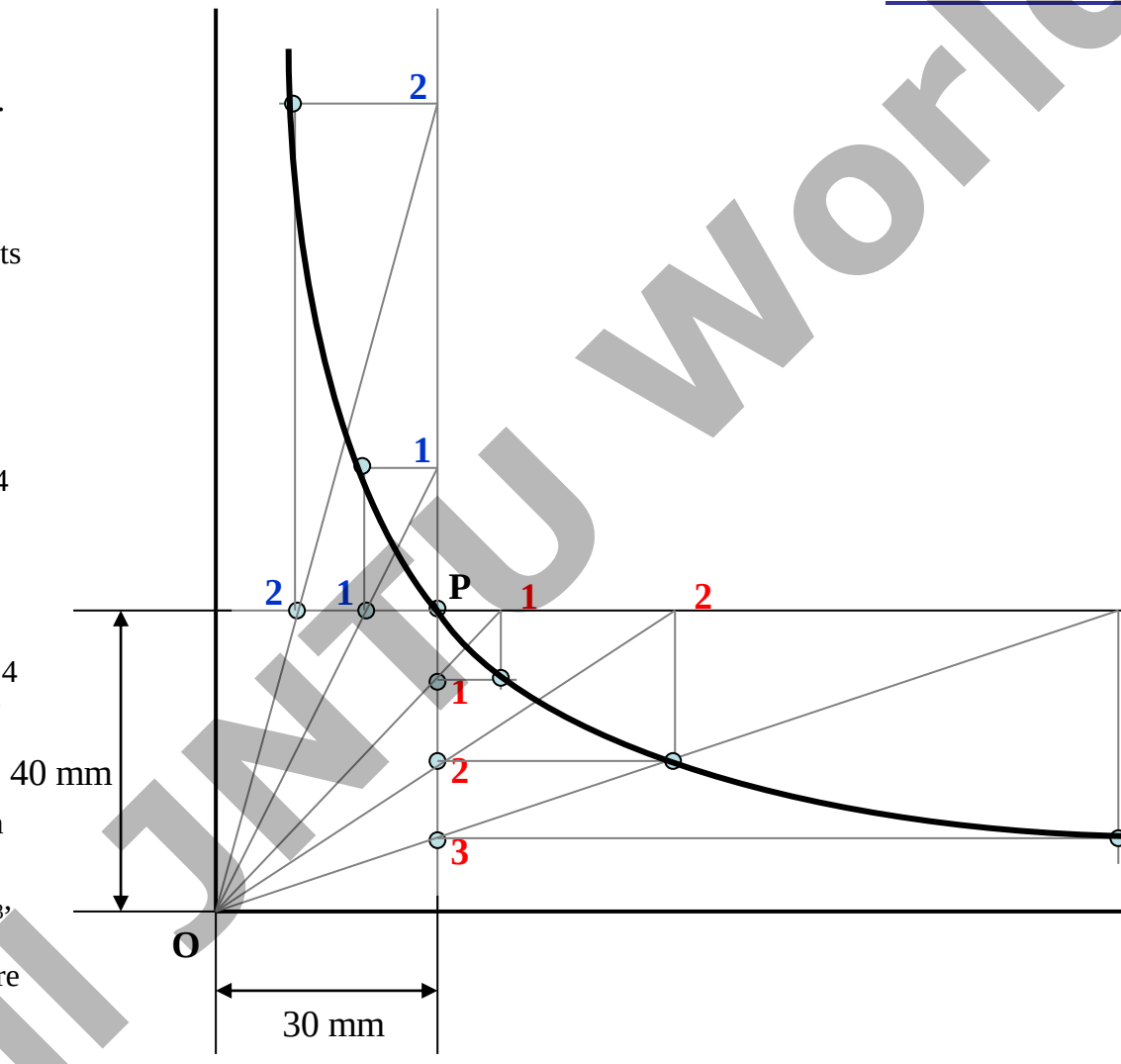

All JNTU World

Problem no.11: A sample of gas is expanded in a cylinder from 10 unit pressure to 1 unit pressure.Expansion follows law PV=Constant.If initial volume being 1 unit, draw the curve of expansion. Also Name the curve.

Form a table giving few more values of P & V

P × V = C
10 × 1 = 10
5 × 2 = 10
4 × 2.5 = 10
2.5 × 4 = 10
2 × 5 = 10
1 × 10 = 10

Now draw a Graph of Pressure against Volume.
It is a PV Diagram and it is Hyperbola.
Take pressure on vertical axis and Volume on horizontal axis.

HYPE
P-V DI

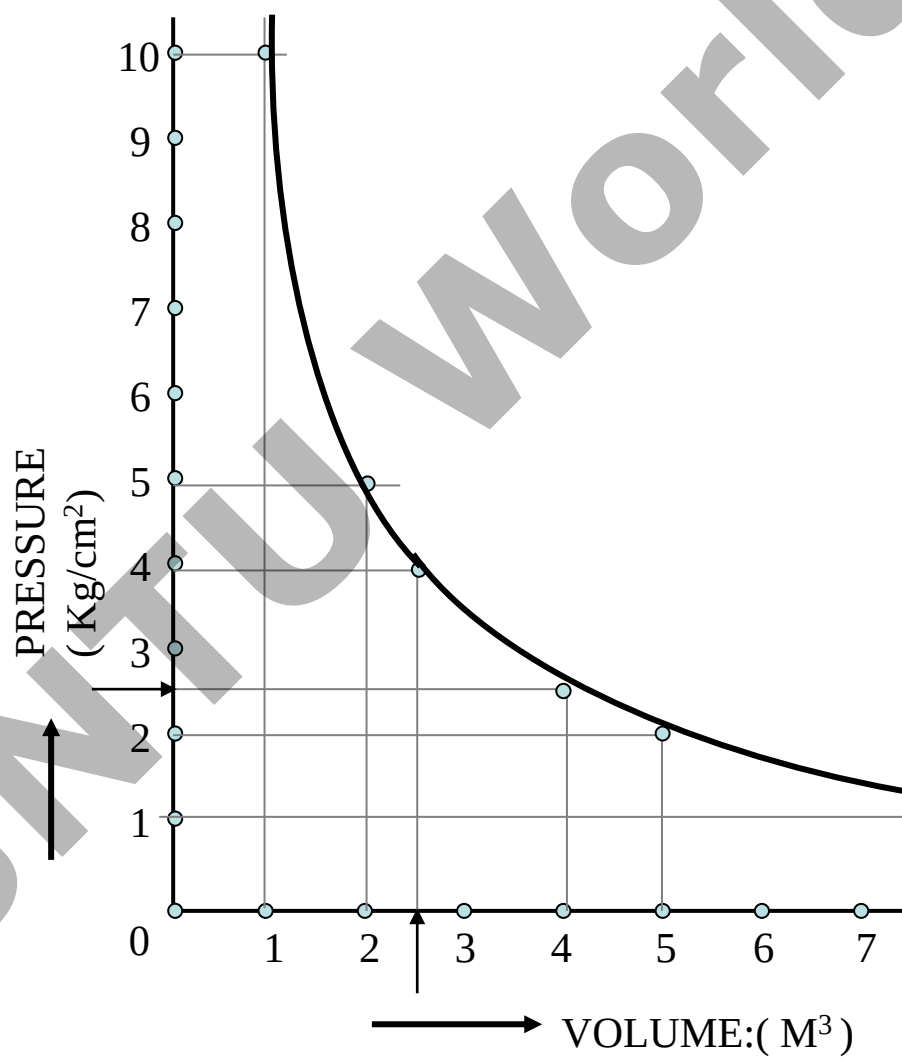

All JNTU World

PROBLEM 12*:-** POINT **F** IS 50 MM FROM A LINE **AB.**A POINT **P** IS MOVING IN A PLANE SUCH THAT THE ***RATIO OF IT'S DISTANCES FROM **F** AND LINE **AB** REMAINS CONSTANT AND EQUALS TO **2/3** DRAW LOCUS OF POINT **P.** **{ ECCENTRICITY = 2/3 }**

STEPS:

1 .Draw a vertical line AB and point F 50 mm from it.
2 .Divide 50 mm distance in 5 parts.
3 .Name 2nd part from F as V. It is 20mm and 30mm from F and AB line resp. It is first point giving ratio of it's distances from F and AB 2/3 i.e 20/30
4 Form more points giving same ratio such as 30/45, 40/60, 50/75 etc.
5.Taking 45,60 and 75mm distances from line AB, draw three vertical lines to the right side of it.
6. Now with 30, 40 and 50mm distances in compass cut these lines above and below, with F as center.
7. Join these points through V in smooth curve.

This is required locus of P.It is an ELLIPSE.

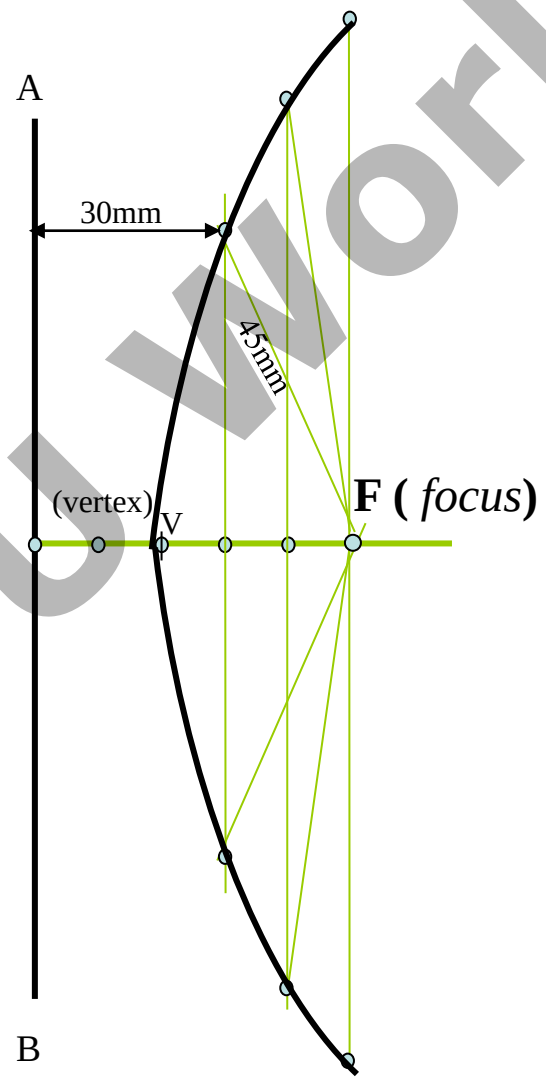

All JNTU World

FirstRanker.com
Firstranker's choice

Problem 13:

EL

TANGENT

TO DRAW TANGENT & NORMAL TO THE CURVE FROM A GIVEN POINT (

1. JOIN POINT Q TO F_1 & F_2
2. BISECT ANGLE $F_1Q\ F_2$ THE ANGLE BISECTOR IS NORMAL
3. A PERPENDICULAR LINE DRAWN TO IT IS TANGENT TO THE CURV

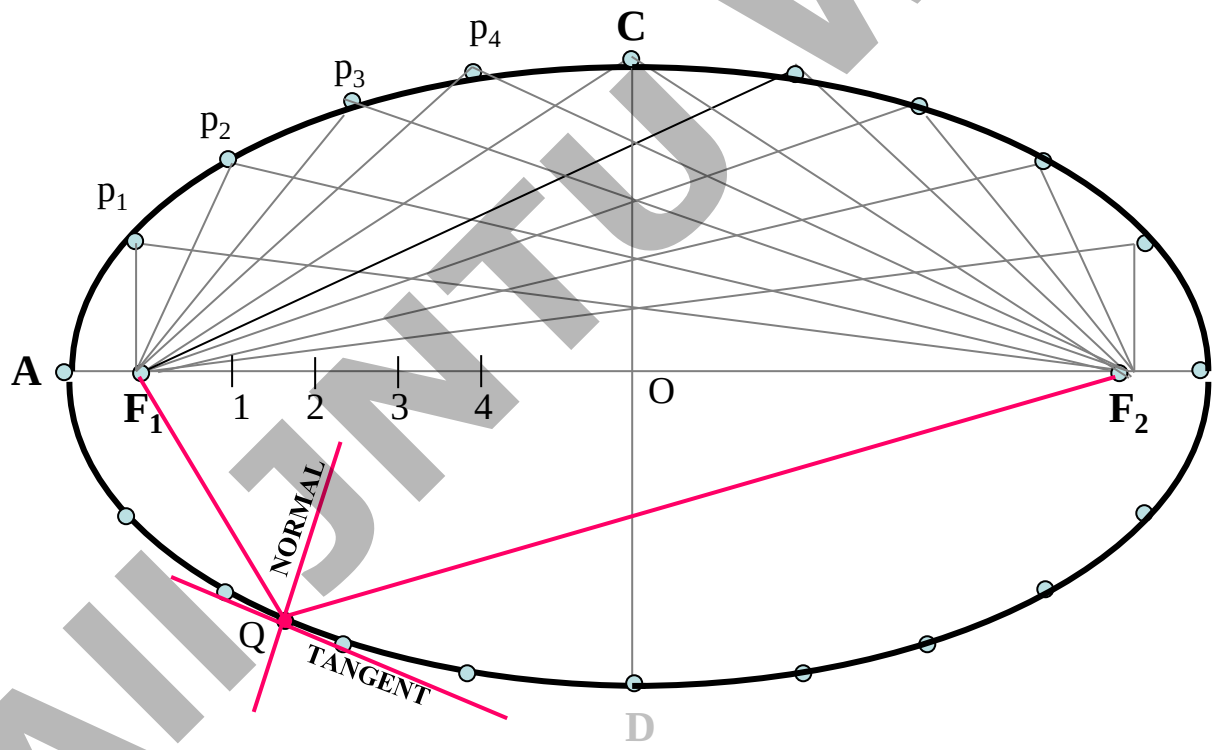

All JNTU World

FirstRanker.com
Firstranker's choice
www.FirstRanker.com www.FirstRanker.com

Problem 14:

TO DRAW TANGENT & NORMAL TO THE CURVE FROM A GIVEN POINT (Q)

1.JOIN POINT **Q** TO **F.**
2.CONSTRUCT 900 ANGLE WITH THIS LINE AT POINT **F**
3.EXTEND THE LINE TO MEET DIRECTRIX AT **T**
4. JOIN THIS POINT TO Q AND EXTEND. THIS IS TANGENT TO ELLIPSE FROM Q
5.TO THIS TANGENT DRAW PERPENDICULAR LINE FROM Q. IT IS NORMAL TO CURVE.

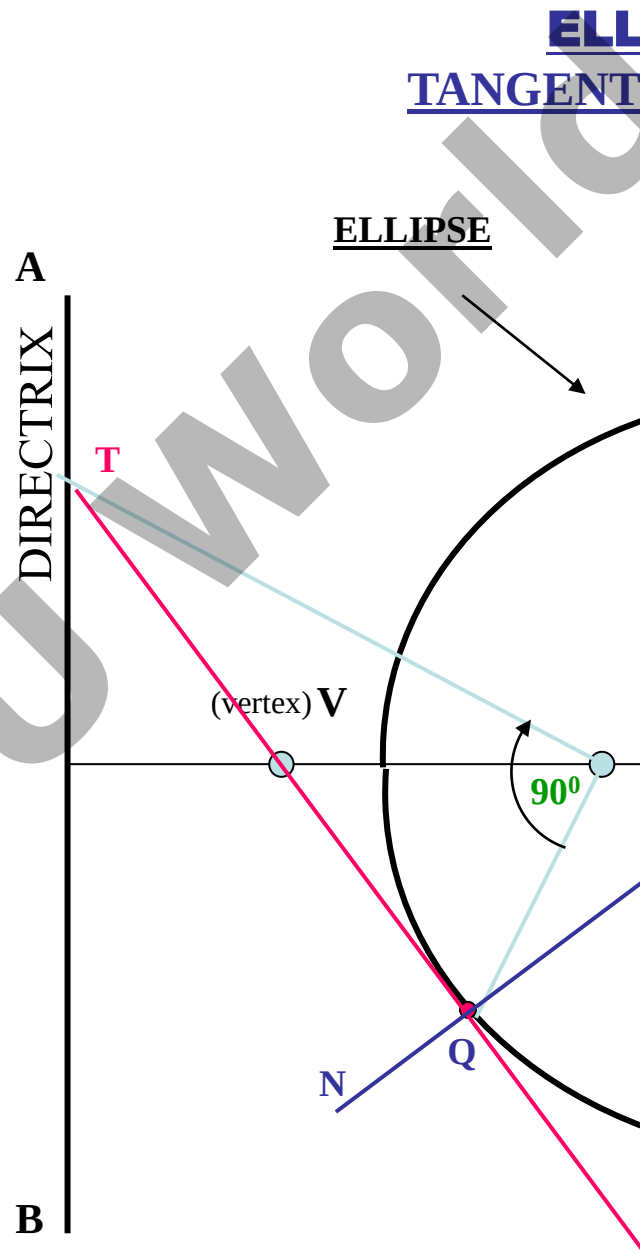

All JNTU World

www.FirstRanker.com

Problem 15:

TO DRAW TANGENT & NORMAL TO THE CURVE FROM A GIVEN POINT (Q)

1.JOIN POINT **Q** TO **F.**
2.CONSTRUCT **90⁰** ANGLE WITH THIS LINE AT POINT **F**
3.EXTEND THE LINE TO MEET DIRECTRIX AT **T**
4. JOIN THIS POINT TO Q AND EXTEND. THIS IS TANGENT TO THE CURVE FROM Q
5.TO THIS TANGENT DRAW PERPENDICULAR LINE FROM Q. IT IS NORMAL TO CURVE.

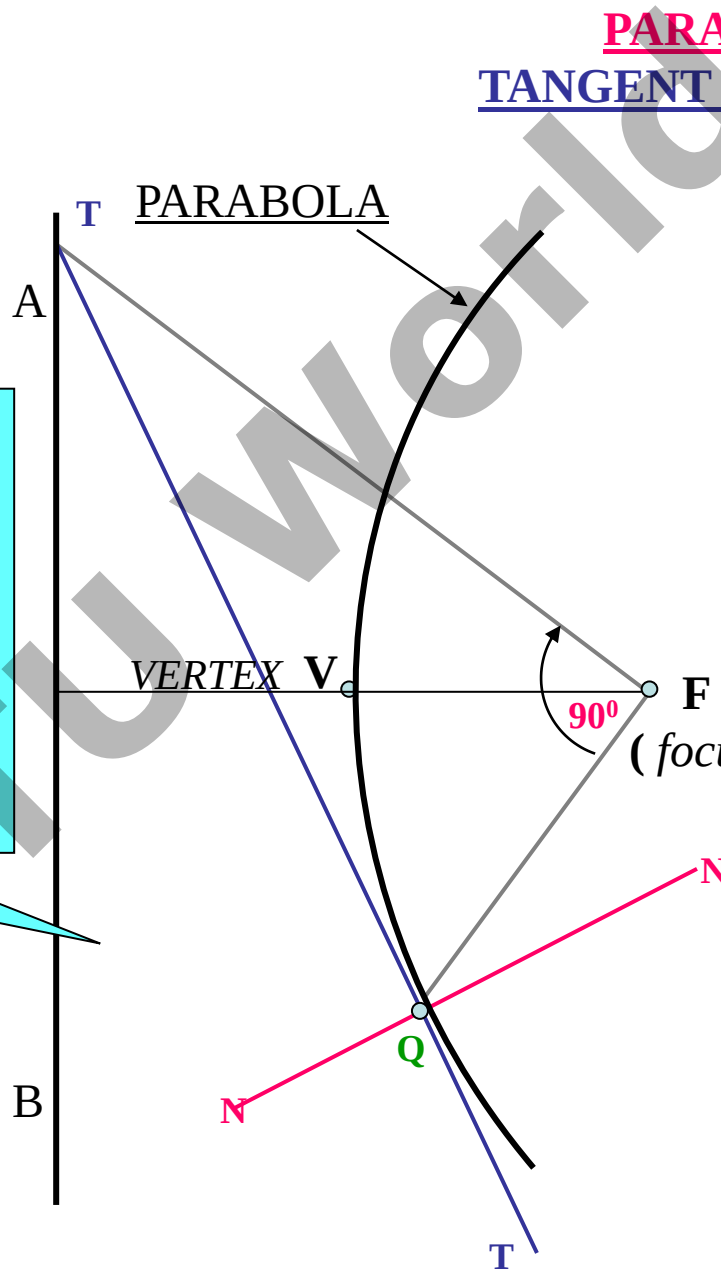

All JNTU World

FirstRanker.com
Firstranker's choice

HYPERBO
TANGENT & N

Problem 16

TO DRAW TANGENT & NORMAL TO THE CURVE FROM A GIVEN POINT (Q)

1. JOIN POINT **Q** TO **F.**
2. CONSTRUCT 90^0 ANGLE WITH THIS LINE AT POINT **F**
3. EXTEND THE LINE TO MEET DIRECTRIX AT **T**
4. JOIN THIS POINT TO **Q** AND EXTEND. THIS IS TANGENT TO CURVE FROM **Q**
5. TO THIS TANGENT DRAW PERPENDICULAR LINE FROM **Q**. IT IS NORMAL TO CURVE.

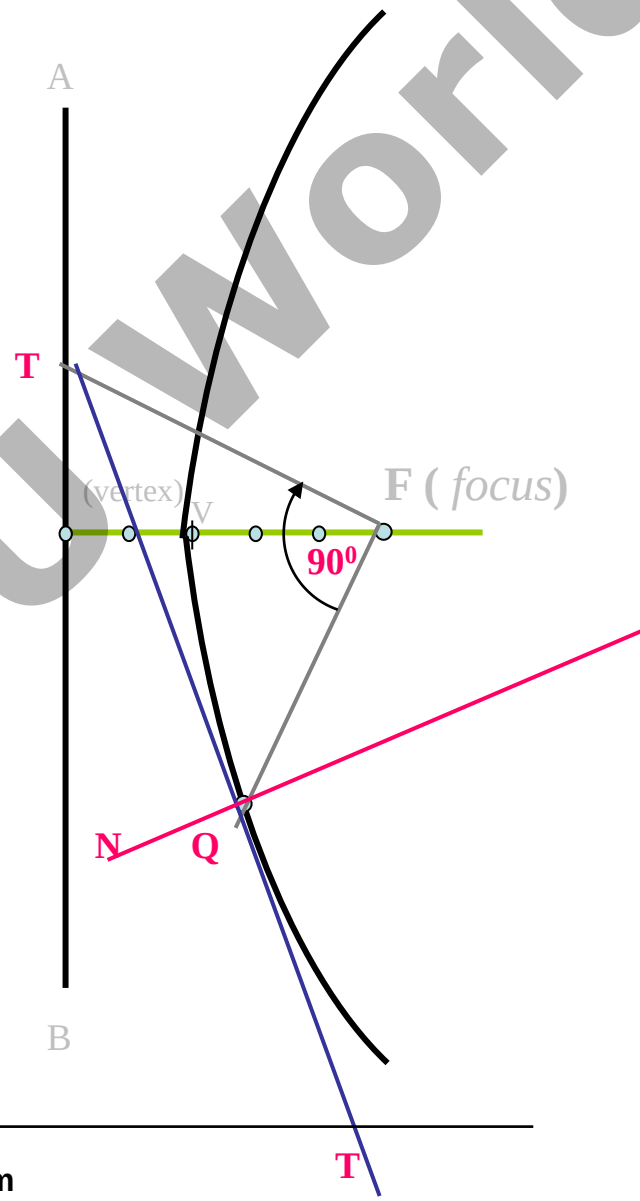

All JNTU World

ENGINEERING CURVES

Part-II

(Point undergoing two types of displaceme

INVOLUTE

1. Involute of a circle
   a)String Length = πD

   b)String Length > πD

   c)String Length < πD

2. Pole having Composite shape.

3. Rod Rolling over a Semicircular Pole.

CYCLOID

1. General Cycloid

2. Trochoid (superior)
3. Trochoid (Inferior)
4. Epi-Cycloid

5. Hypo-Cycloid

SPIRAL

1. Spiral of One Convolution.

2. Spiral of Two Convolutions.

1. C

2. C

AND

Methods of Tangents & To These

All JNTU World

FirstRanker.com
Firstranker's choice
www.FirstRanker.com www.FirstRanker.com

DEFINITIONS

CYCLOID:

IT IS A LOCUS OF A POINT ON THE PERIPHERY OF A CIRCLE WHICH ROLLS ON A STRAIGHT LINE PATH.

SUPERIORTROCHOI
IF THE POINT IN THE D
OF CYCLOID IS OUTSID

INFERIOR TROCHOI
IF IT IS INSIDE THE CI

EPI-CYCLOID
IF THE CIRCLE IS ROLL
ANOTHER CIRCLE FROM

HYPO-CYCLOID.
IF THE CIRCLE IS ROLL
INSIDE THE OTHER CIR

INVOLUTE:

IT IS A LOCUS OF A FREE END OF A STRING WHEN IT IS WOUND ROUND A CIRCULAR POLE

SPIRAL:

IT IS A CURVE GENERATED BY A POINT WHICH REVOLVES AROUND A FIXED POINT AND AT THE SAME MOVES TOWARDS IT.

HELIX:

IT IS A CURVE GENERATED BY A POINT WHICH MOVES AROUND THE SURFACE OF A RIGHT CIRCULAR CYLINDER / CONE AND AT THE SAME TIME ADVANCES IN AXIAL DIRECT
AT A SPEED BEARING A CONSTANT RATIO TO THE SPPED OF ROTATION.
(for problems refer topic Development of surfaces)

All JNTU World
www.FirstRanker.com

FirstRanker.com
Firstranker's choice
www.FirstRanker.com www.FirstRanker.com

Problem: Draw involute of an equilateral triangle of 35 mm sides.

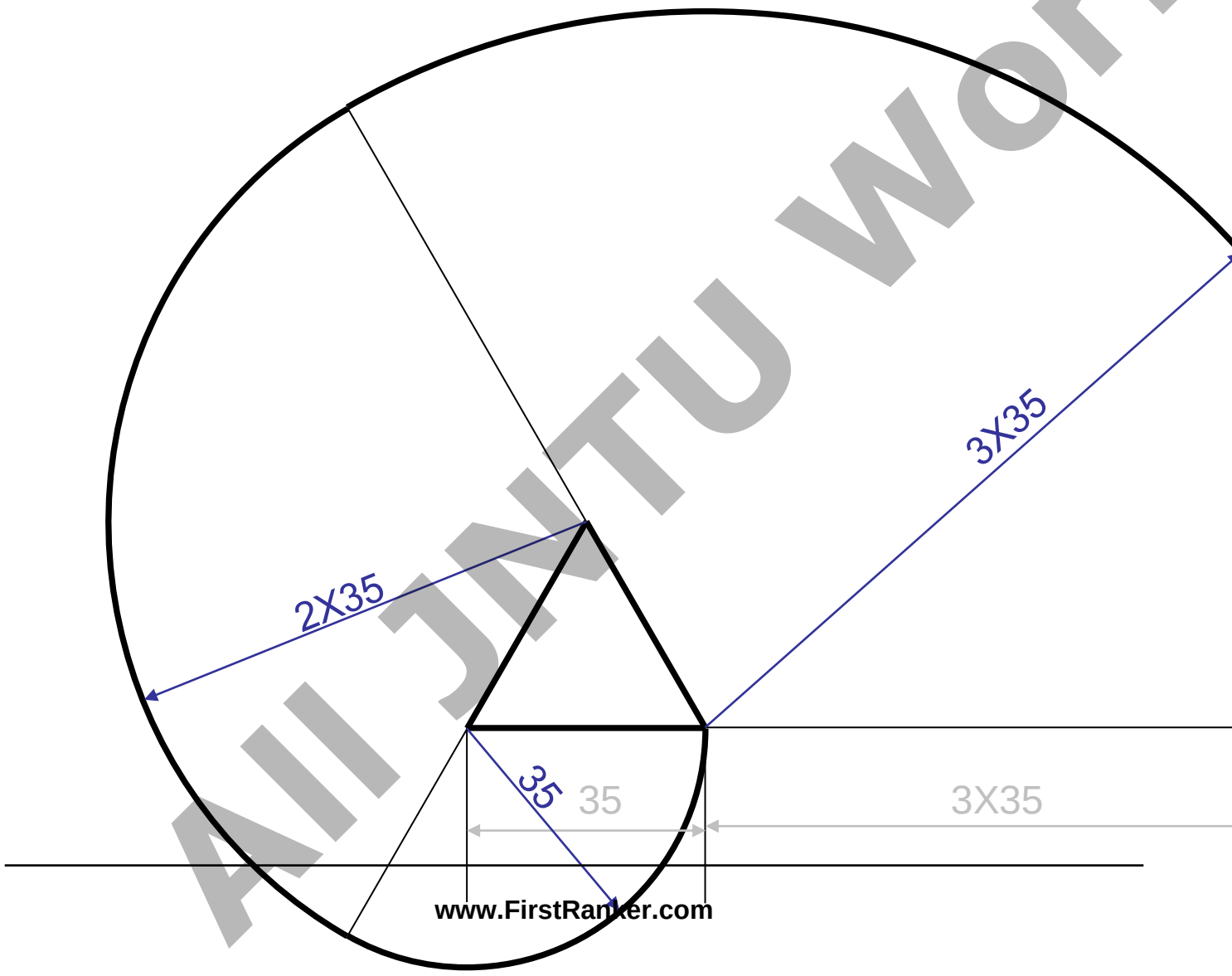

All JNTU World
www.FirstRanker.com

FirstRanker.com
Firstranker's choice
www.FirstRanker.com www.FirstRanker.com

Problem: Draw involute of a square of 25 mm sides

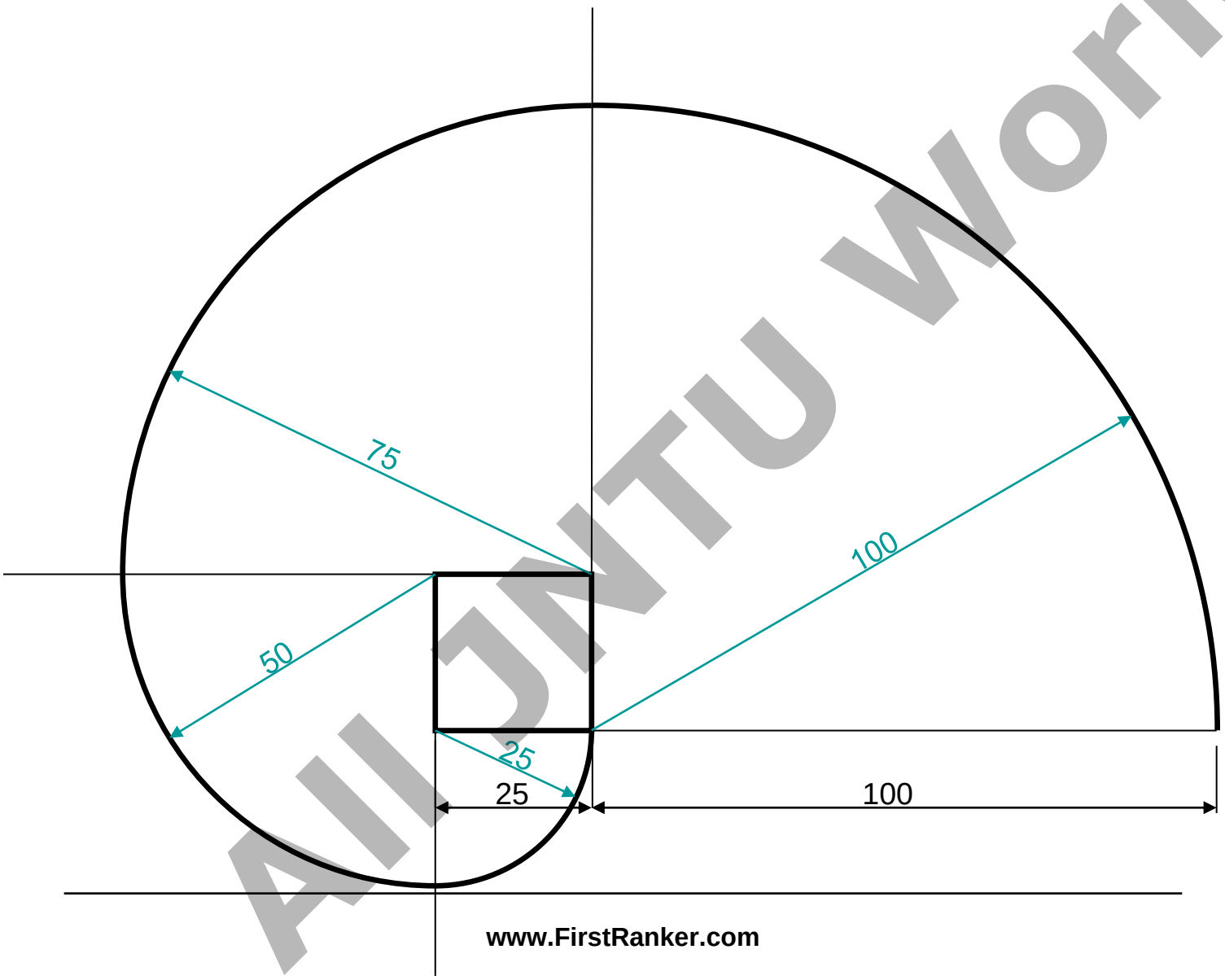

AllJNTU World
www.FirstRanker.com

Problem no 17: Draw Involute of a circle.
String length is equal to the circumference of circle.

Solution Steps:

1) Point or end P of string AP is exactly πD distance away from A. Means if this string is wound round the circle, it will completely cover given circle. B will meet A after winding.
2) Divide πD (AP) distance into 8 number of equal parts.
3) Divide circle also into 8 number of equal parts.
4) Name after A, 1, 2, 3, 4, etc. up to 8 on πD line AP as well as on circle (in anticlockwise direction).
5) To radius C-1, C-2, C-3 up to C-8 draw tangents (from 1,2,3,4,etc to circle).
6) Take distance 1 to P in compass and mark it on tangent from point 1 on circle (means one division less than distance AP).
7) Name this point P1
8) Take 2-P distance in compass and mark it on the tangent from point 2. Name it point P2.
9) Similarly take 3 to P, 4 to P, 5 to P up to 7 to P distance in compass and mark on respective tangents and locate P3, P4, P5 up to P8 (i.e. A) points and join them in smooth curve it is an INVOLUTE of a given circle.

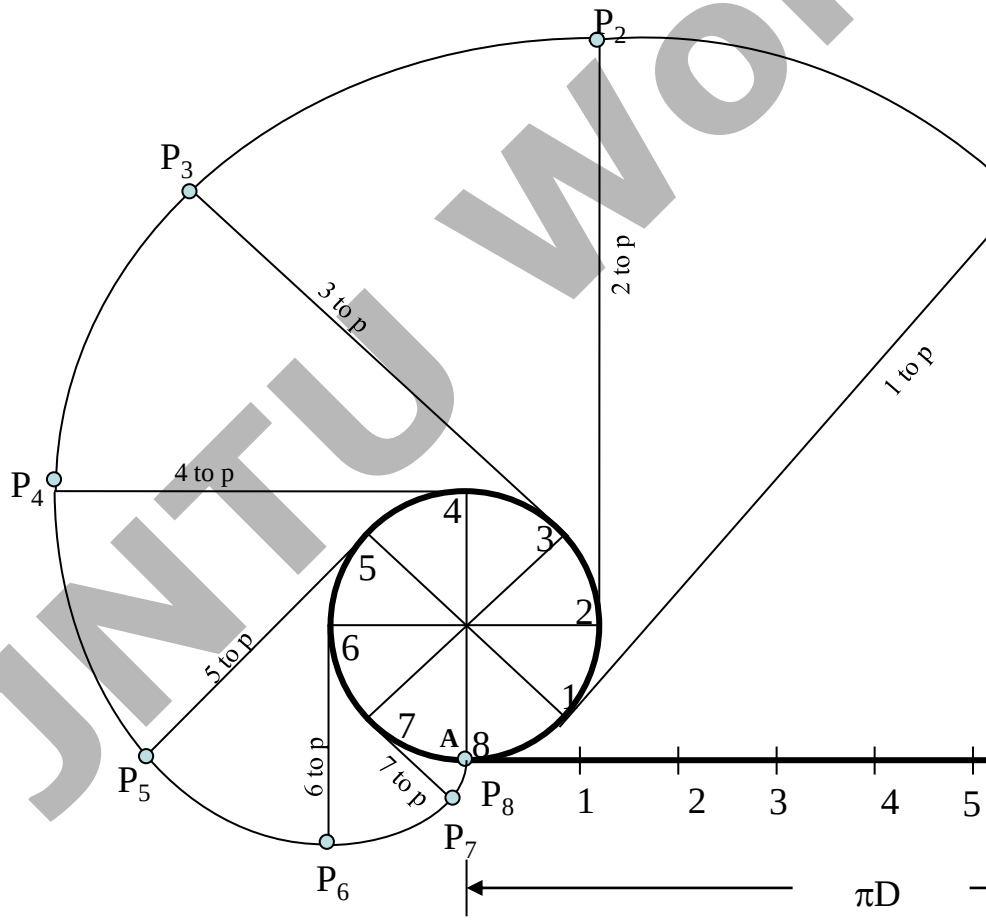

All JNTU World

Problem 18: Draw Involute of a circle.
String length is MORE than the circumference of circle.

INVOLUT
String len

Solution Steps:
In this case string length is more than Π D.

But remember!
Whatever may be the length of string, mark Π D distance horizontal i.e.along the string and divide it in 8 number of equal parts, and not any other distance. Rest all steps are same as previous INVOLUTE. Draw the curve completely.

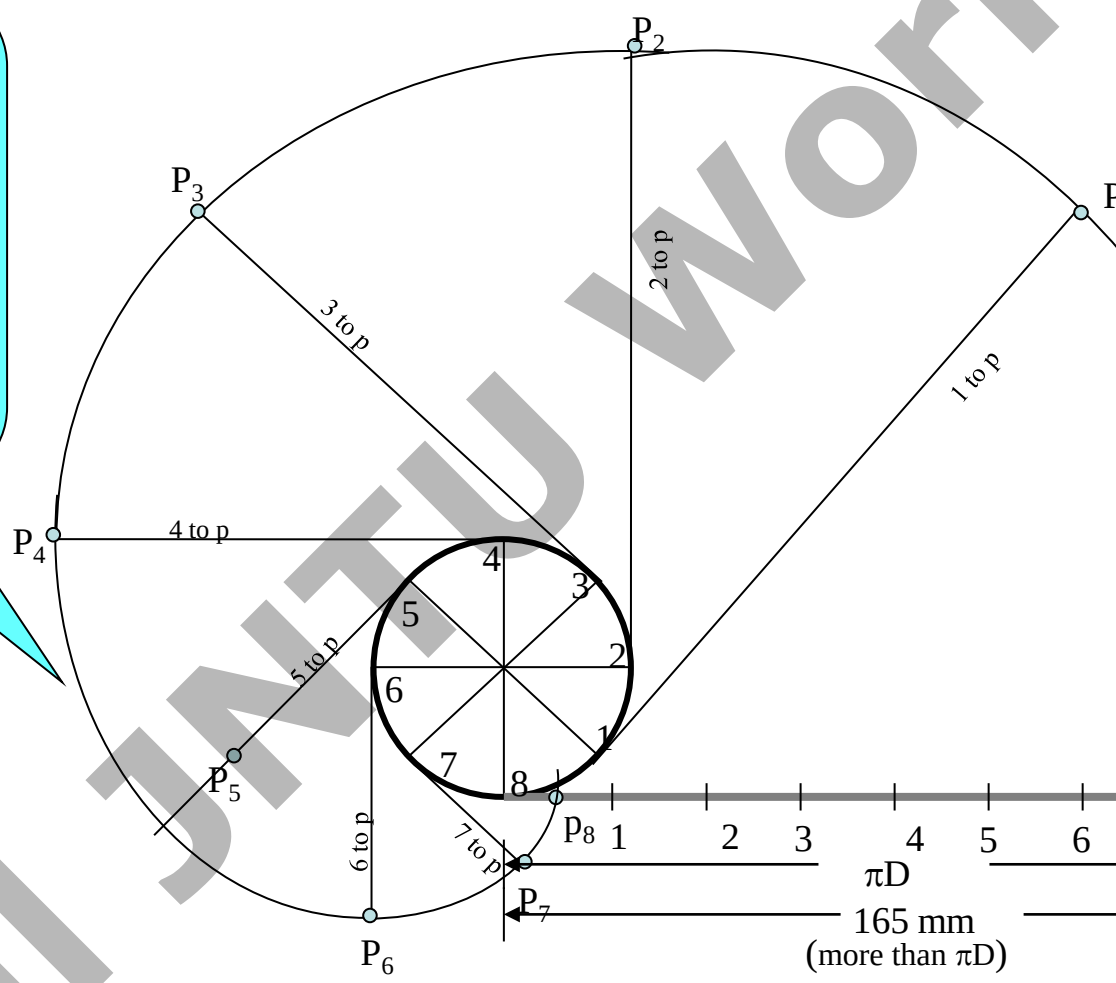

All JNTU World

Problem 19: Draw Involute of a circle.
String length is LESS than the circumference of circle.

INVOLUTE

String length

Solution Steps:
In this case string length is Less than Π D.

But remember!
Whatever may be the length of string, mark Π D distance horizontal i.e.along the string and divide it in 8 number of equal parts, and not any other distance. Rest all steps are same as previous INVOLUTE. Draw the curve completely.

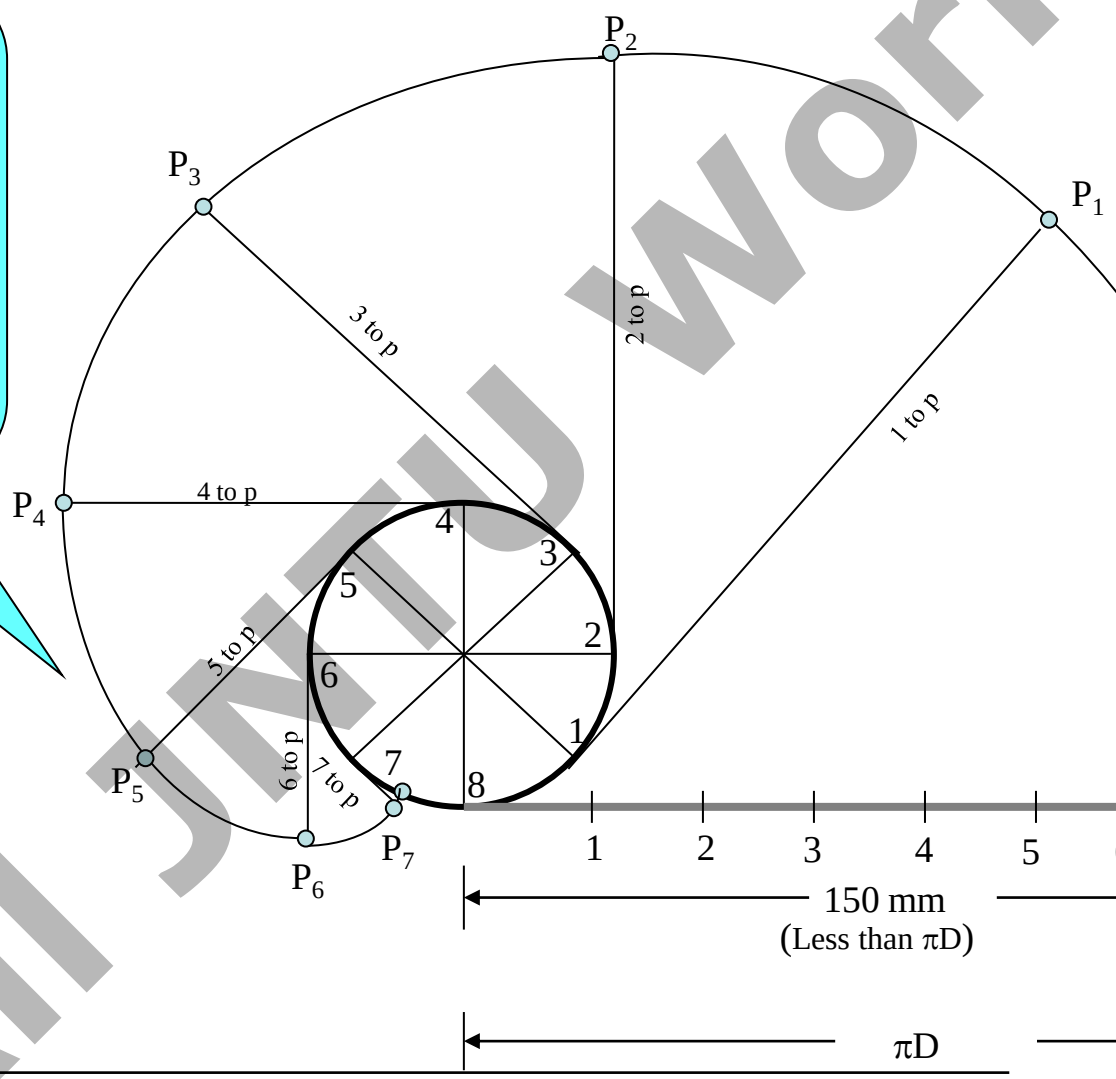

All JNTU World

PROBLEM 21 : Rod AB 85 mm long rolls over a semicircular pole without slipping from it's initially vertical position till it becomes up-side-down vertical.
Draw locus of both ends A & B.

Solution Steps?

If you have studied previous problems properly, you can surely solve this also. Simply remember that this being a rod, it will roll over the surface of pole. Means when one end is approaching, other end will move away from poll.

OBSERVE ILLUSTRATION CAREFULLY!

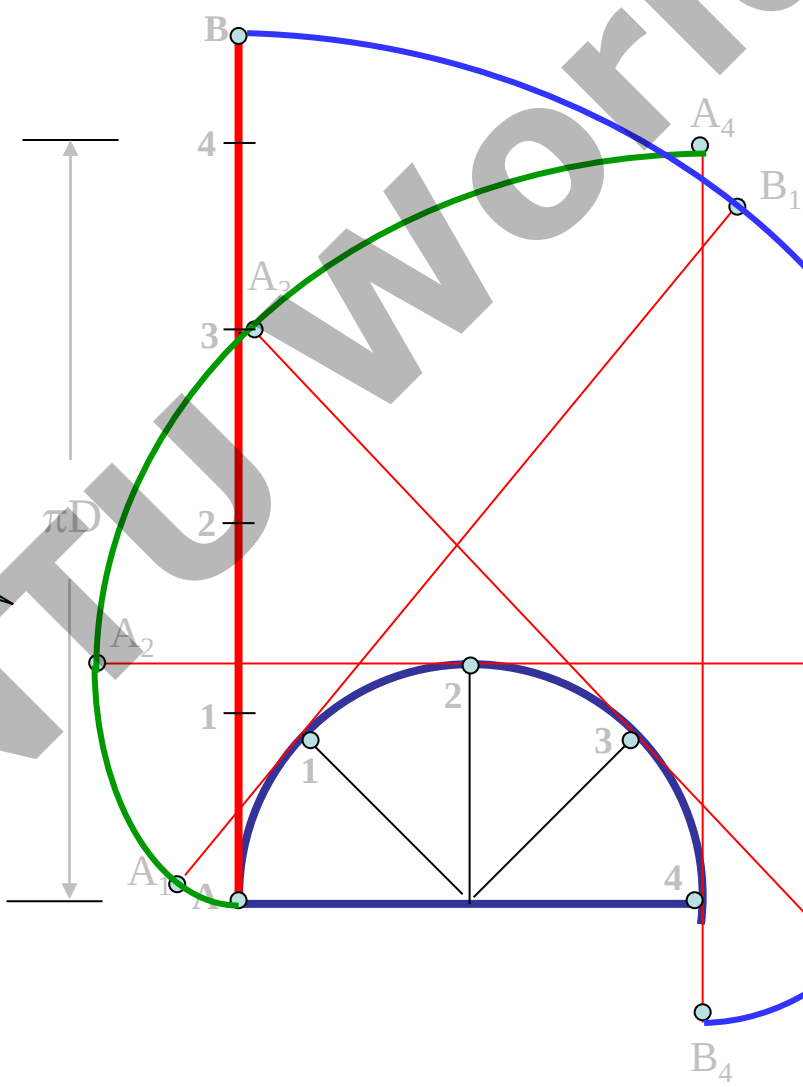

All JNTU World

FirstRanker.com
Firstranker's choice
www.FirstRanker.com www.FirstRanker.com

Problem 22: Draw locus of a point on the periphery of a circle which rolls on straight line path. Take circle diameter as 50 mm. Draw normal and tangent on the curve at a point 40 mm above the directing line.

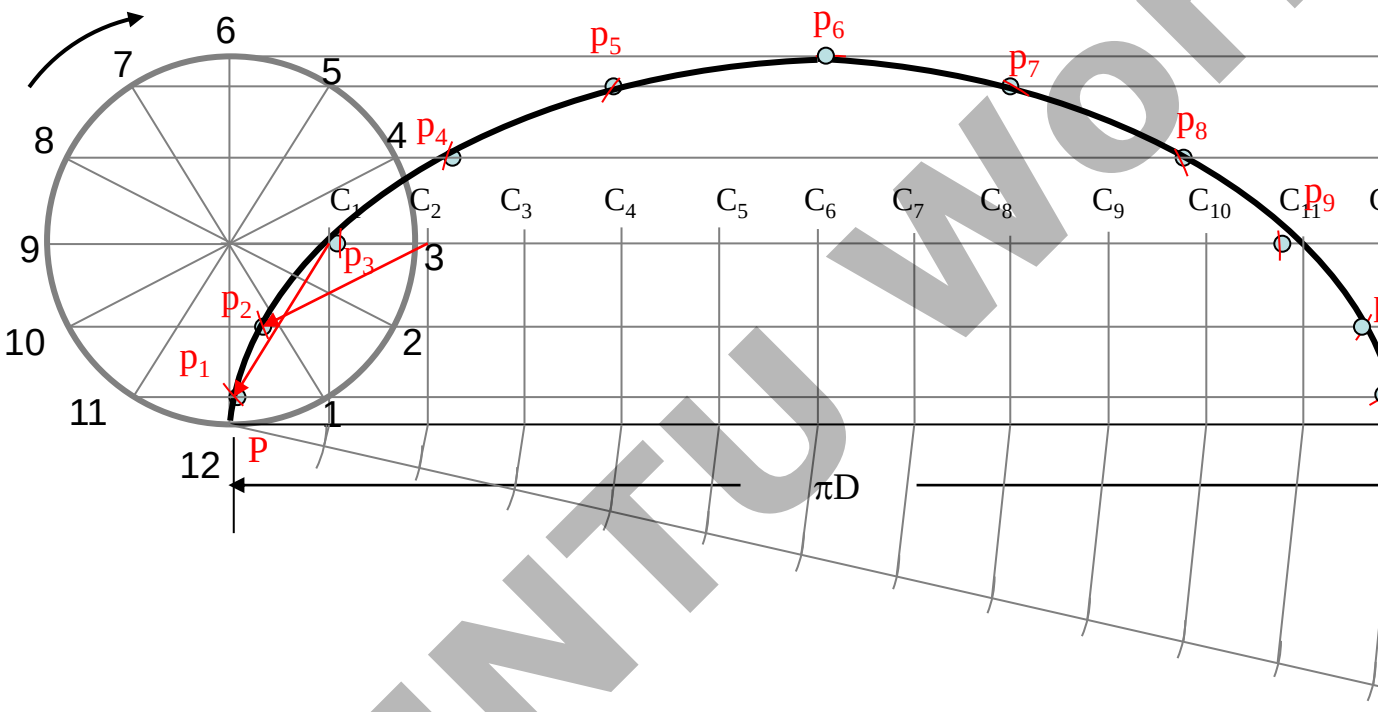

Solution Steps:

1) From center C draw a horizontal line equal to πD distance.
2) Divide πD distance into 12 number of equal parts and name them C_1, C_2, C_3___ etc.
3) Divide the circle also into 12 number of equal parts and in anticlockwise direction, after P name
4) From all these points on circle draw horizontal lines. (parallel to locus of C)
5) With a fixed distance C-P in compass, C_1 as center, mark a point on horizontal line from 1. Nam
6) Repeat this procedure from C_2, C_3, C_4 up to C_{12} as centers. Mark points P_2, P_3, P_4, P_5 up to P_{12} horizontal lines drawn from 1,2, 3, 4, 5, 6, 7 respectively.
7) Join all these points by curve. **It is Cycloid**.

www.FirstRanker.com
All JNTU World

FirstRanker.com
Firstranker's choice
www.FirstRanker.com www.FirstRanker.com

PROBLEM 25: DRAW LOCUS OF A POINT ON THE PERIPHERY OF A CIRCLE WHICH ROLLS ON A CURVED P
of rolling Circle 50 mm And radius of directing circle i.e. curved path, 75 mm.

Solution Steps:

1) When smaller circle will roll on larger circle for one revolution it will cover πD distance on arc and it will be decided by included arc angle θ.
2) Calculate θ by formula $\theta = (r/R) \times 3600$.
3) Construct angle θ with radius OC and draw an arc by taking O as center OC as radius and form sector of angle θ.
4) Divide this sector into 12 number of equal angular parts. And from C onward name them C_1, C_2, C_3 up to C_{12}.
5) Divide smaller circle (Generating circle) also in 12 number of equal parts. And next to P in anticlockw-ise direction name those 1, 2, 3, up to 12.
6) With O as center, O-1 as radius draw an arc in the sector. Take O-2, O-3, O-4, O-5 up to O-12 distances with center O, draw all concentric arcs in sector. Take fixed distance C-P in compass, C_1 center, cut arc of 1 at P_1.

Repeat procedure and locate P_2, P_3, P_4, P_5 unto P_{12} (as in cycloid) and join them by smooth curve. This is EPI – ~~CYCLOID.~~

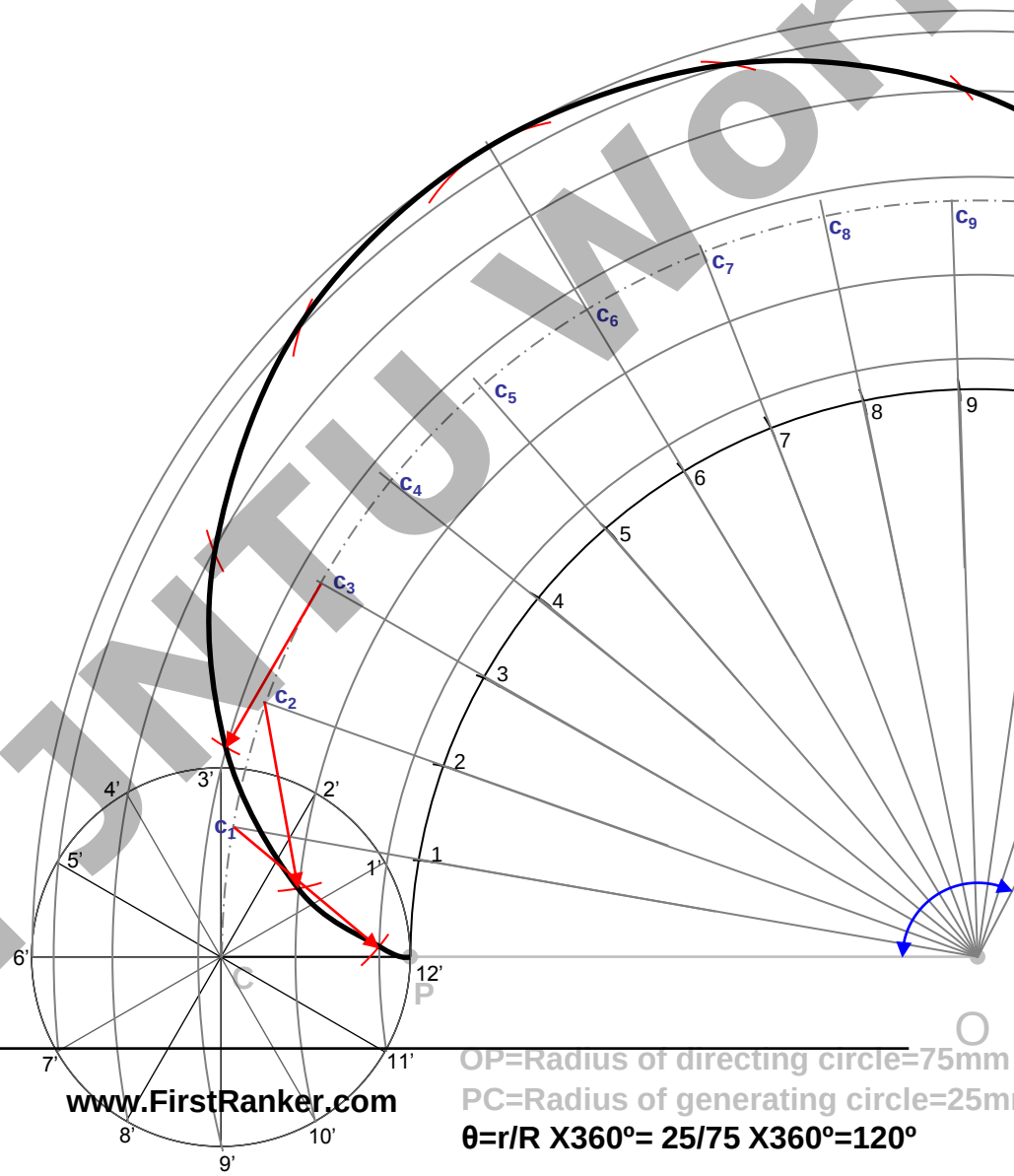

OP=Radius of directing circle=75mm
PC=Radius of generating circle=25m
θ=r/R X360º= 25/75 X360º=120º

All JNTU World
www.FirstRanker.com

PROBLEM 26: DRAW LOCUS OF A POINT ON THE PERIPHERY OF A CIRCLE WHICH ROLLS FROM THE INSIDE OF A CURVED PATH. **Take diameter of rolling circle 50 mm and radius of directing circle (curved path) 75 mm.**

Solution Steps:

1) Smaller circle is rolling here, inside the larger circle. It has to rotate anticlockwise to move ahead.
2) Same steps should be taken as in case of EPI – CYCLOID. Only change is in numbering direction of 12 number of equal parts on the smaller circle.
3) From next to P in clockwise direction, name 1,2,3,4,5,6,7,8,9,10,11,12
4) Further all steps are that of epi – cycloid. **This is called HYPO – CYCLOID**.

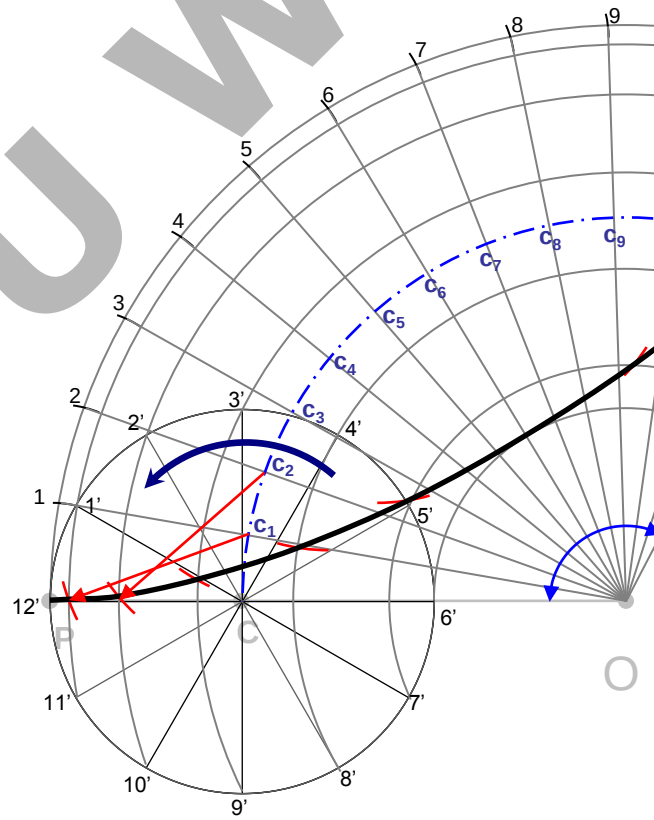

OP=Radius of directing circle=75mm
PC=Radius of generating circle=25m

θ=r/R X360º= 25/75 X360º=120º

All JNTU World

FirstRanker.com
Firstranker's choice

STEPS:
DRAW INVOLUTE AS USUAL.

MARK POINT **Q** ON IT AS DIRECTED.

JOIN **Q** TO THE CENTER OF CIRCLE **C**. CONSIDERING **CQ** DIAMETER, DRAW A SEMICIRCLE AS SHOWN.

MARK POINT OF INTERSECTION OF THIS SEMICIRCLE AND POLE CIRCLE AND JOIN IT TO **Q.**

THIS WILL BE **NORMAL TO INVOLUTE.**

DRAW A LINE AT RIGHT ANGLE TO THIS LINE FROM **Q.**

IT WILL BE TANGENT TO INVOLUTE.

INVOLUTE OF A CIRCLE

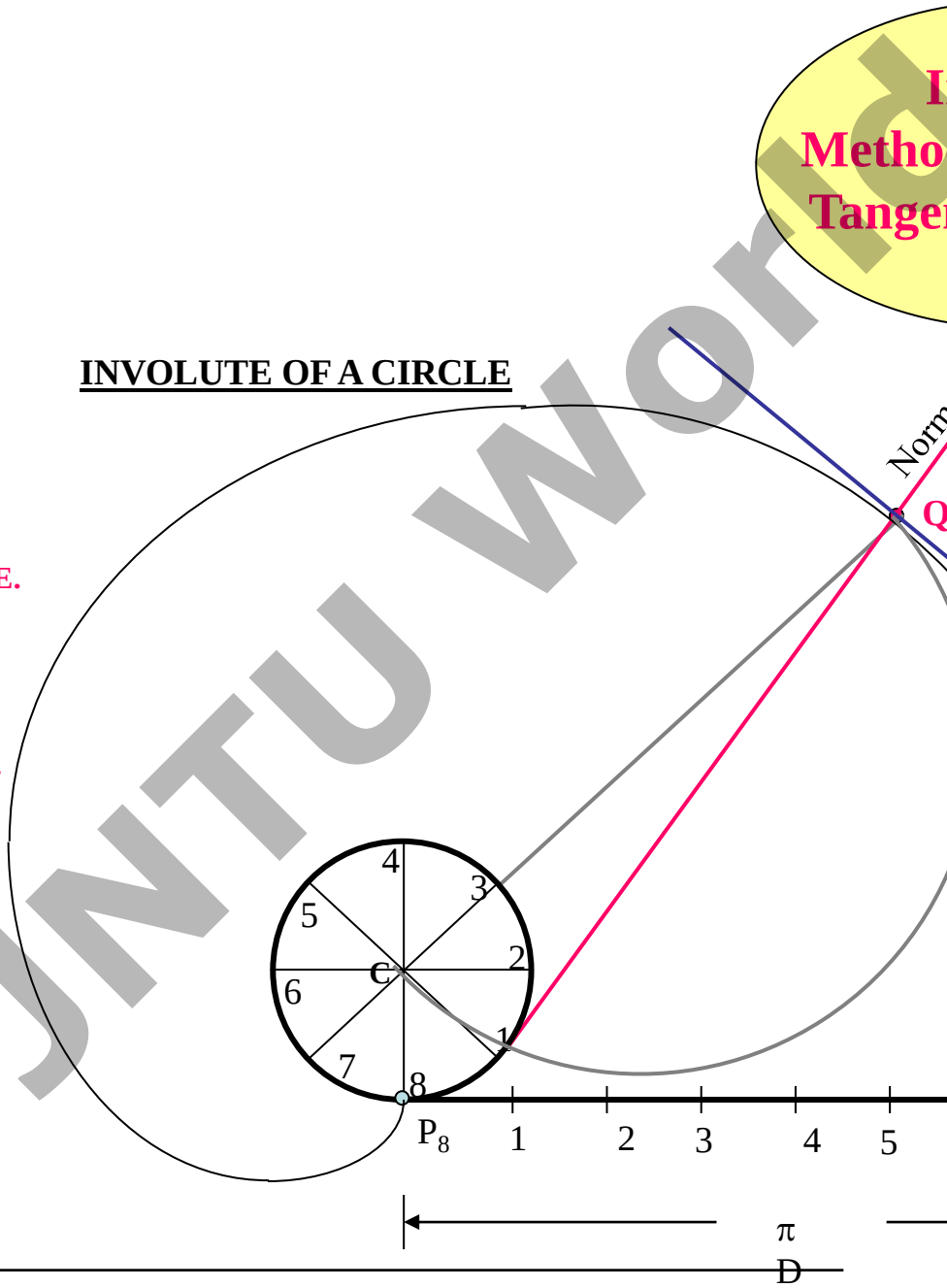

All JNTU World

FirstRanker.com
Firstranker's choice
www.FirstRanker.com www.FirstRanker.com

STEPS:

DRAW CYCLOID AS USUAL.
MARK POINT **Q** ON IT AS DIRECTED.

WITH CP DISTANCE, FROM **Q.** CUT THE POINT ON LOCUS OF **C** AND JOIN IT TO **Q.**

FROM THIS POINT DROP A PERPENDICULAR ON GROUND LINE AND NAME IT N

JOIN N WITH Q.THIS WILL BE **NORMAL TO CYCLOID.**

DRAW A LINE AT RIGHT ANGLE TO THIS LINE FROM **Q.**

IT WILL BE TANGENT TO CYCLOID.

CYCLOID

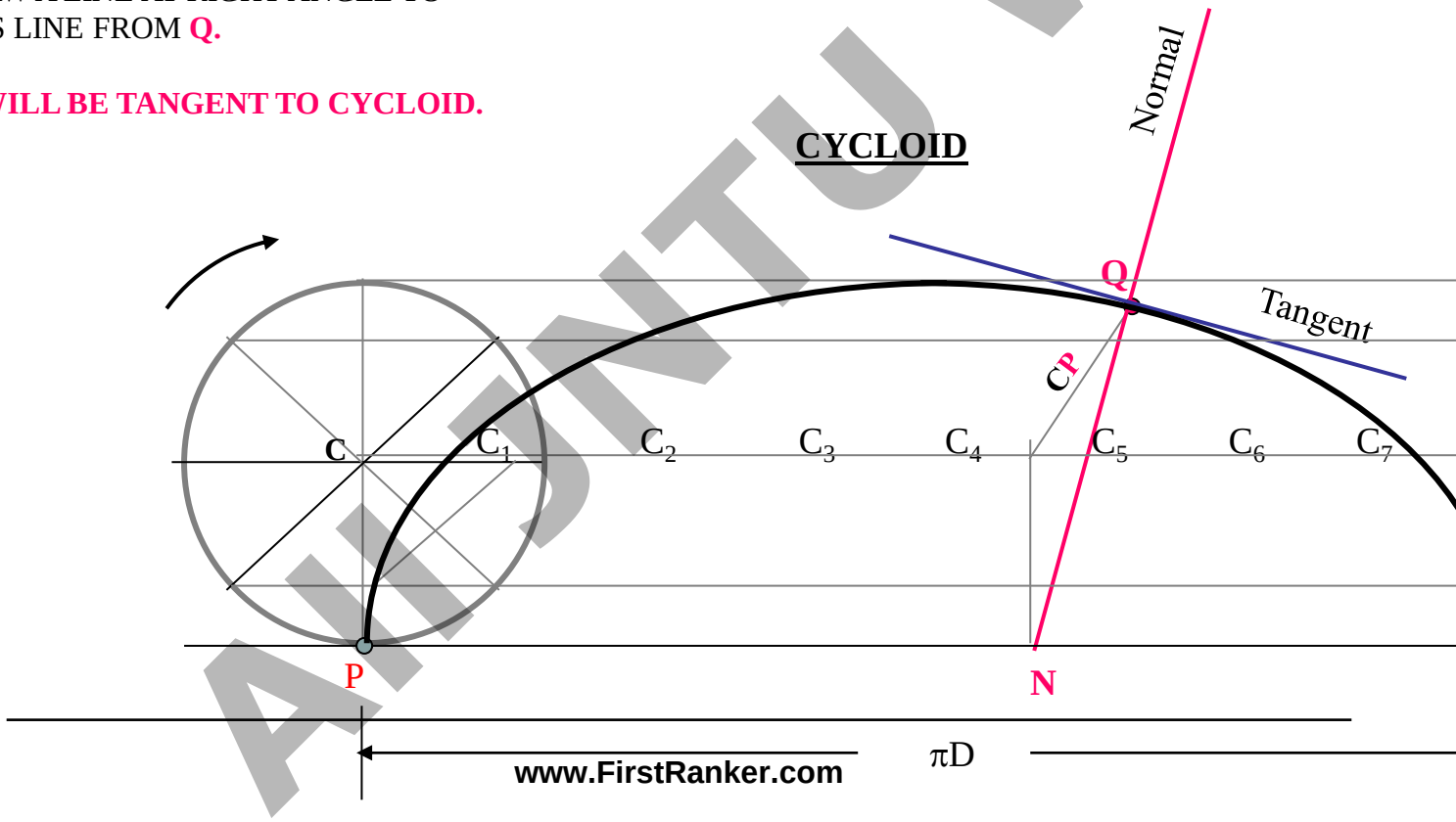

AKTU World
www.FirstRanker.com

FirstRanker.com
Firstranker's choice

UNIT 2

All JNTU World

FirstRanker.com
Firstranker's choice
www.FirstRanker.com www.FirstRanker.com

ORTHOGRAPHIC PROJECTIONS

OF POINTS, LINES, PLANES, AND SOLIDS.

TO DRAW PROJECTIONS OF ANY OBJECT
ONE MUST HAVE FOLLOWING INFORMATI

A) **OBJECT**
{ WITH IT'S DESCRIPTION, WELL DEFINED.}

B) **OBSERVER**
{ ALWAYS OBSERVING PERPENDICULAR TO RESP. REF

C) **LOCATION OF OBJECT,**
{ MEANS IT'S POSITION WITH REFFERENCE TO H.P. & V

TERMS 'ABOVE' & 'BELOW' WITH RESPECTIVE TO H.P.
AND TERMS 'INFRONT' & 'BEHIND' WITH RESPECTIVE TO V.P
FORM 4 QUADRANTS.
OBJECTS CAN BE PLACED IN ANY ONE OF THESE 4 QUADRAN

IT IS INTERESTING TO LEARN THE EFFECT ON THE POSITIONS OF VIEW
OF THE OBJECT WITH RESP. TO X-Y LINE, WHEN PLACED IN DIFFERENT

STUDY ILLUSTRATIONS GIVEN ON NEXT PAGES AND NOTE THE RESULTS.TO MA
HERE A POINT (A) IS TAKEN AS AN OBJECT. BECAUSE IT'S ALL VIEWS ARE JUS

www.FirstRanker.com
All JNTU World

FirstRanker.com
Firstranker's choice
www.FirstRanker.com www.FirstRanker.com

NOTATIONS

FOLLOWING NOTATIONS SHOULD BE FOLLOWED WHILE NAM
DIFFERENT VIEWS IN ORTHOGRAPHIC PROJECTIONS.

OBJECT	POINT A	LINE AB
IT'S TOP VIEW	a	a b
IT'S FRONT VIEW	a'	a' b'
IT'S SIDE VIEW	a"	a" b"

SAME SYSTEM OF NOTATIONS SHOULD BE FOLLOWED
INCASE NUMBERS, LIKE 1, 2, 3 – A

All JNTU World

www.FirstRanker.com

FirstRanker.com
Firstranker's choice
www.FirstRanker.com www.FirstRanker.com

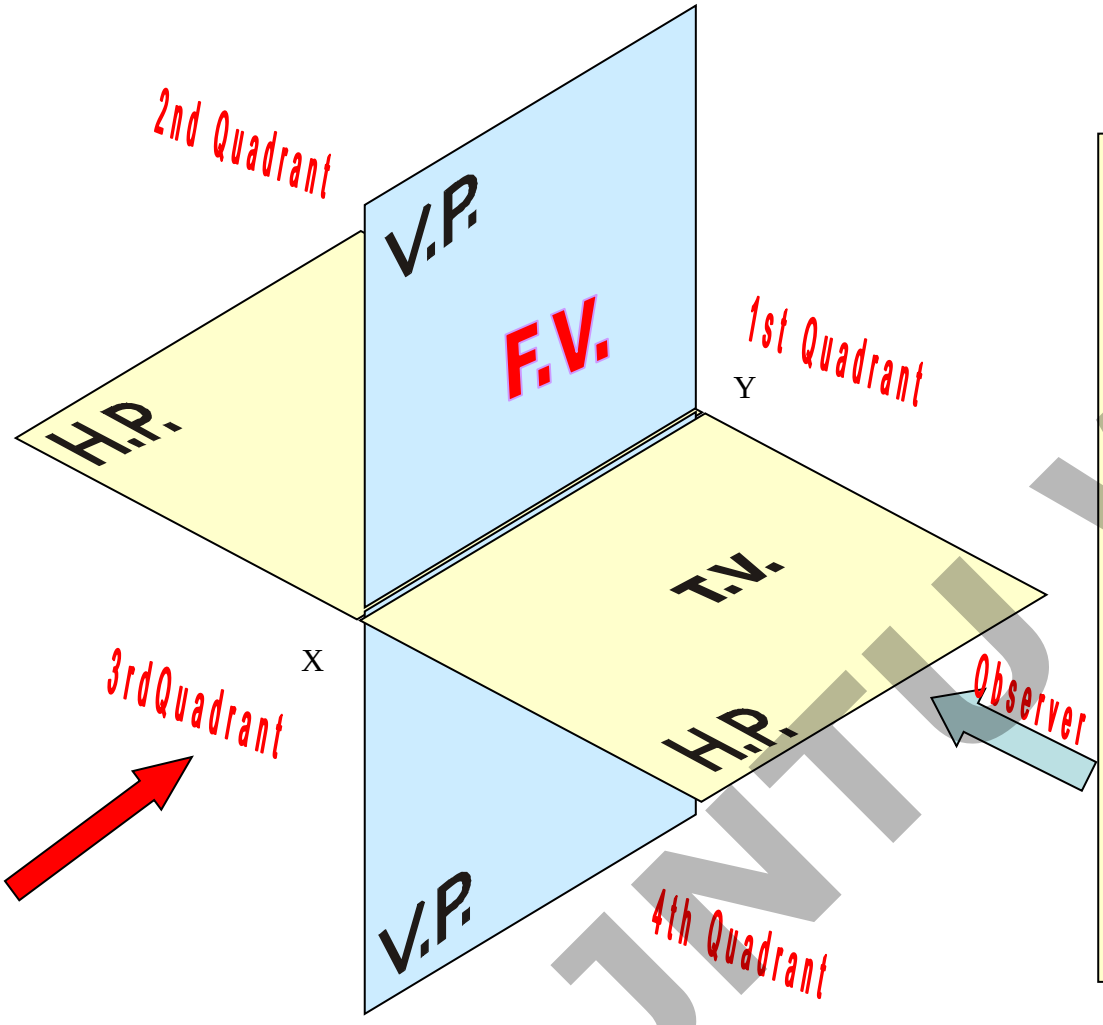

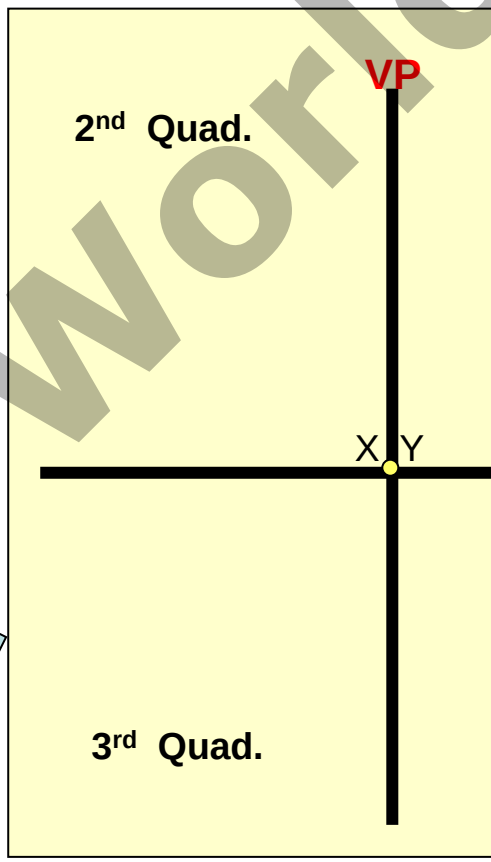

THIS QUADRANT PATTERN,
IF OBSERVED ALONG X-Y LINE (IN RED ARROW DIRECTIO
WILL EXACTLY APPEAR AS SHOWN ON RIGHT SIDE AND H
IT IS FURTHER USED TO UNDERSTAND ILLUSTRATION PR

www.FirstRanker.com
All JNTU World

Point A is Placed In different quadrants and it's Fv & Tv are brought in same plane for Observer to see clearly.
Fv is visible as it is a view on VP. But as Tv is is a view on Hp, it is rotated downward 90^0, In clockwise direction.The In front part of Hp comes below xy line and the part behind Vp comes above.

Observe and note the process.

POINT A IN 2ND QUADRANT

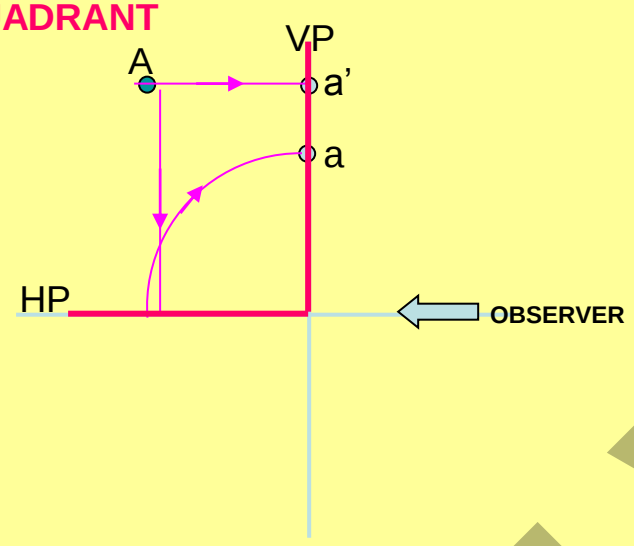

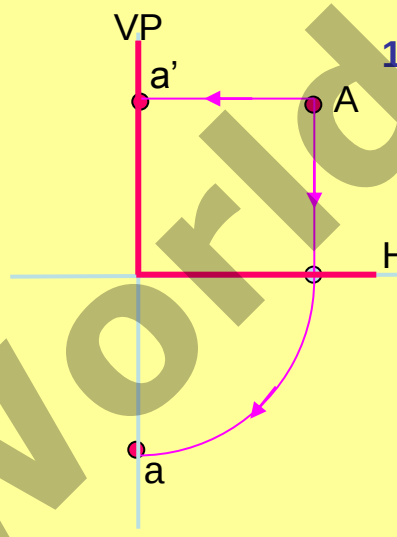

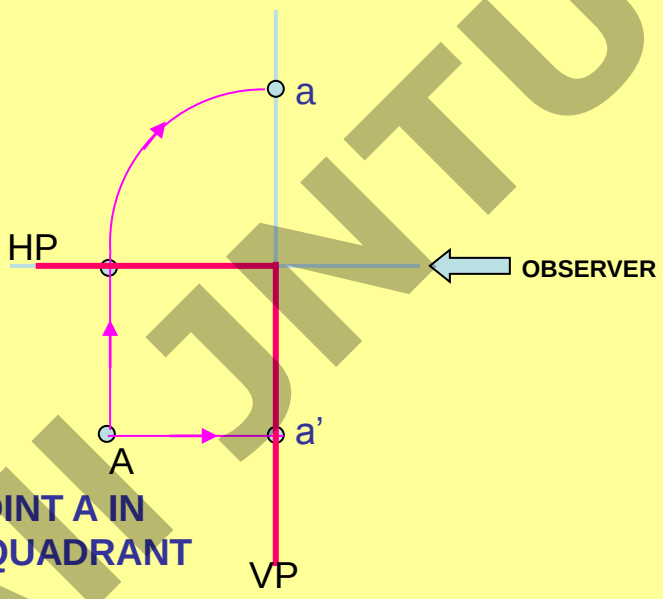

POINT A IN 3RD QUADRANT

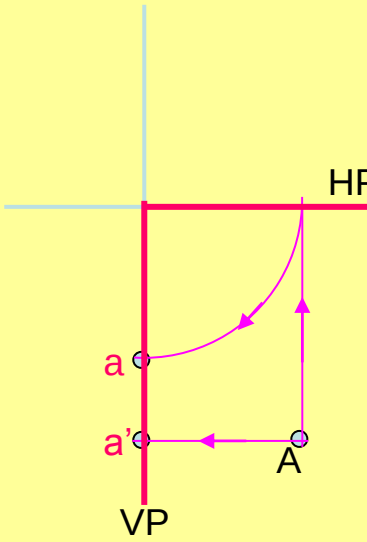

All JNTU World

Basic concepts for drawing projection of point

FV & TV of a point always lie in the same vertical li

FV of a point 'P' is represented by p'. It shows position of the
with respect to HP.

If the point lies above HP, p' lies above the XY line.

If the point lies in the HP, p' lies on the XY line.

If the point lies below the HP, p' lies below the XY line.

TV of a point 'P' is represented by p. It shows position of the point w
respect to VP.

If the point lies in front of VP, p lies below the XY line.

If the point lies in the VP, p lies on the XY line.

If the point lies behind the VP, p lies above the XY line.

All JNTU World

FirstRanker.com
Firstranker's choice
www.FirstRanker.com www.FirstRanker.com

PROJECTIONS OF A POINT IN FIRST QUADRA

POINT A ABOVE HP & INFRONT OF VP

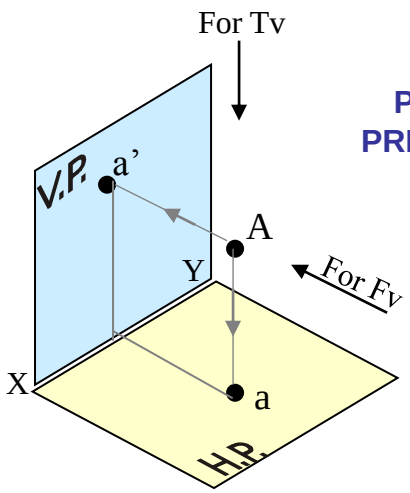

PICTORIAL PRESENTATION

POINT A ABOVE HP & IN VP

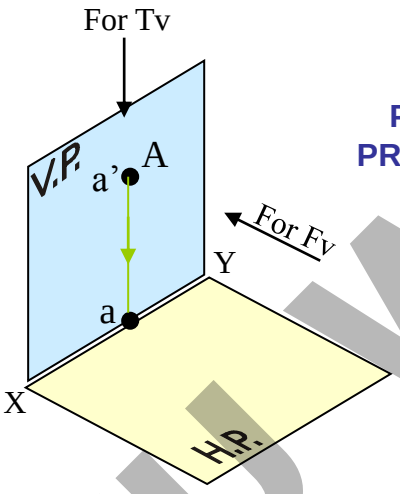

PICTORIAL PRESENTATION

POINT A IN & INFRONT O

ORTHOGRAPHIC PRESENTATIONS OF ALL ABOVE CASES.

Fv above xy, Tv below xy.

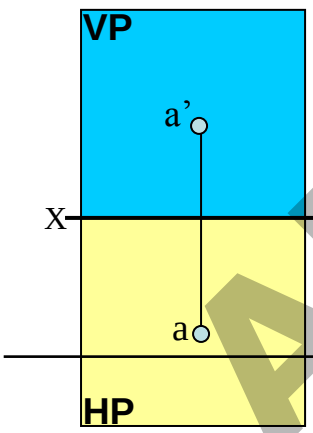

Fv above xy, Tv on xy.

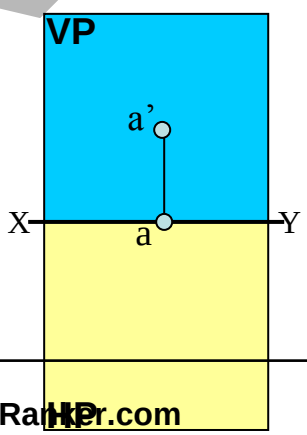

Fv on Tv belo

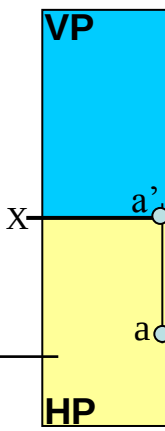

All JNTU World
www.FirstRanker.com

PROJECTIONS OF STRAIGHT LINES

INFORMATION REGARDING A LINE *means*
IT'S LENGTH,
POSITION OF IT'S ENDS WITH HP & VP
IT'S INCLINATIONS WITH HP & VP WILL BE GIVEN.
AIM:- TO DRAW IT'S PROJECTIONS - MEANS FV & TV.

SIMPLE CASES OF THE LINE

1. A VERTICAL LINE (LINE PERPENDICULAR TO HP & // TO VP
2. LINE PARALLEL TO BOTH HP & VP.
3. LINE INCLINED TO HP & PARALLEL TO VP.
4. LINE INCLINED TO VP & PARALLEL TO HP.
5. LINE INCLINED TO BOTH HP & VP.

STUDY ILLUSTRATIONS GIVEN ON NEXT PAG
SHOWING CLEARLY THE NATURE OF FV & TV
OF LINES LISTED ABOVE AND NOTE RESULT

All JNTU World

FirstRanker.com
Firstranker's choice
www.FirstRanker.com www.FirstRanker.com

(Pictorial Presentation)

1.

A Line perpendicular to Hp & // to Vp

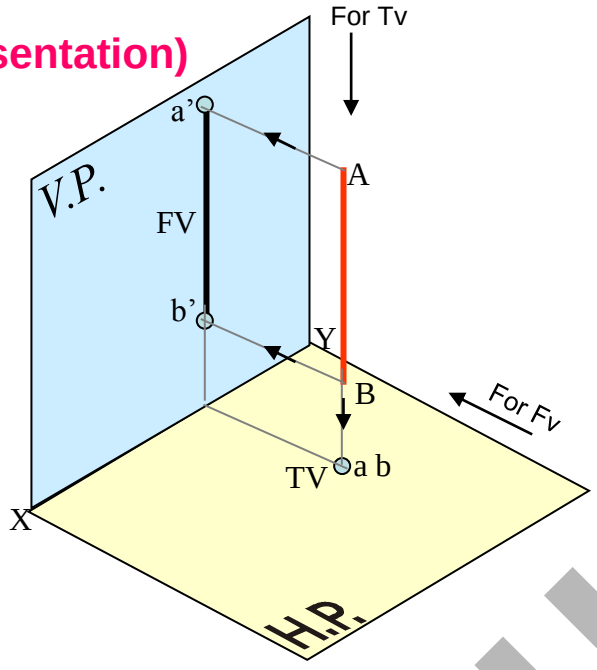

Note:
Fv is a vertical line
Showing True Length
&
Tv is a point.

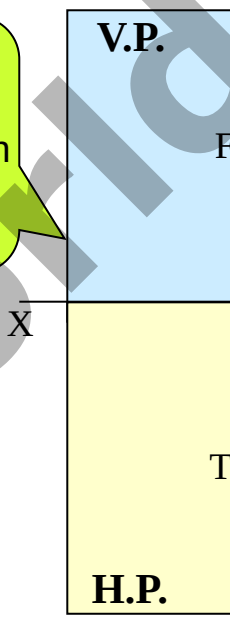

(Pictorial Presentation)

2.

A Line // to Hp & // to Vp

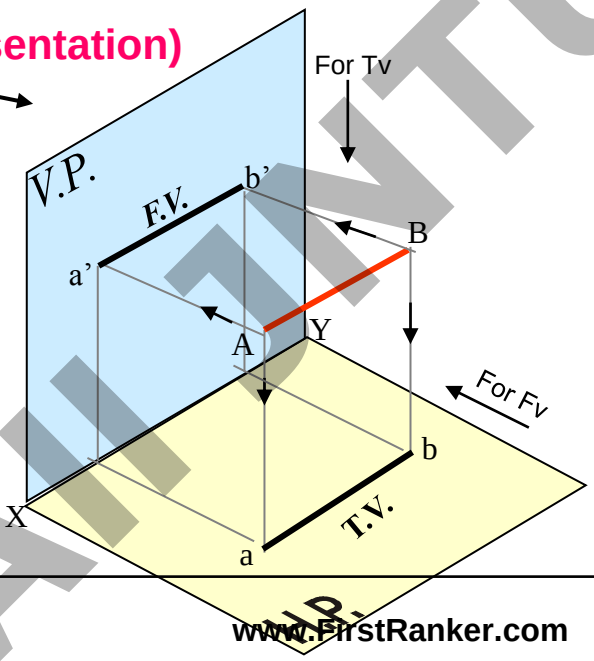

Note:
Fv & Tv both are
// to xy
&
both show T. L.

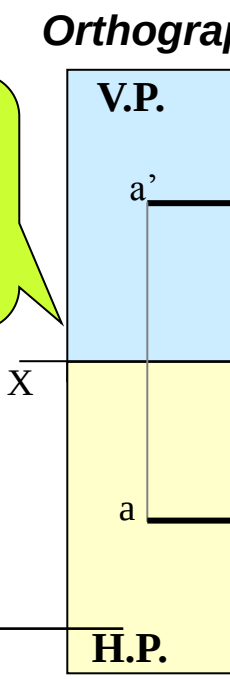

All JNTU World

www.FirstRanker.com

FirstRanker.com
Firstranker's choice
www.FirstRanker.com www.FirstRanker.com

3.

A Line inclined to Hp
and
parallel to Vp

(Pictorial presentation)

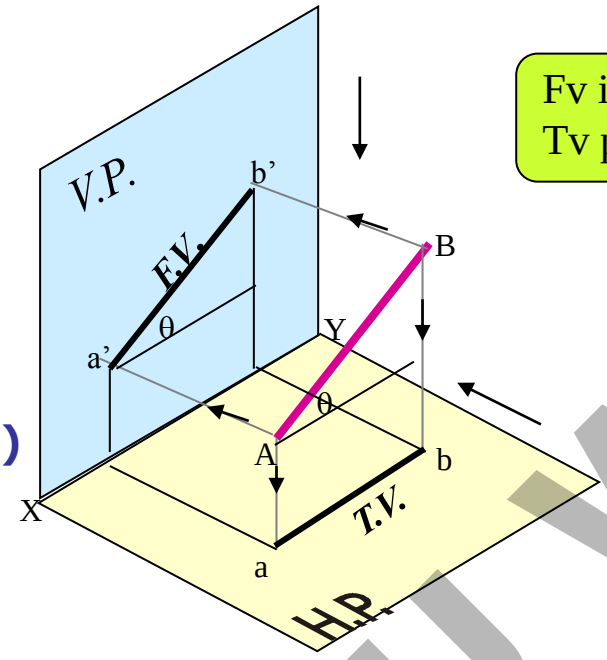

Fv inclined to xy
Tv parallel to xy.

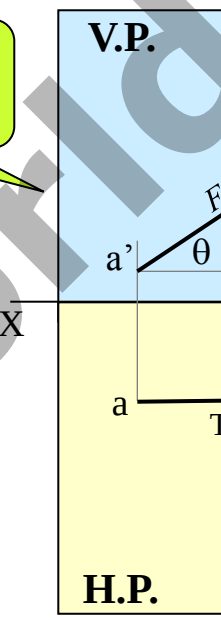

Orthograph

4.

A Line inclined to Vp
and
parallel to Hp

(Pictorial presentation)

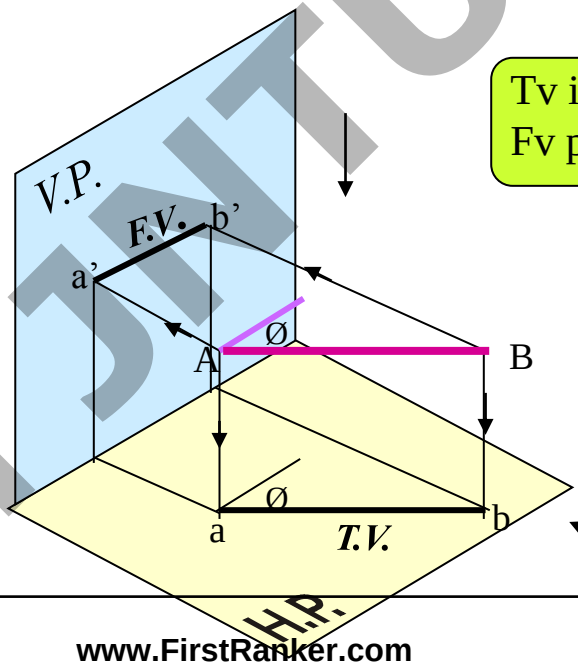

Tv inclined to xy
Fv parallel to xy.

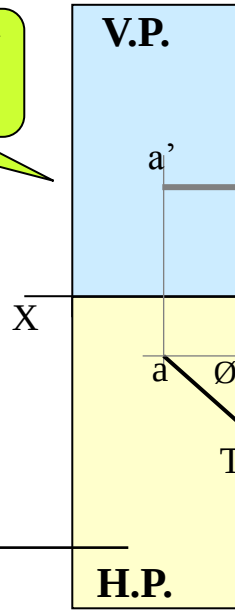

All JNTU World

www.FirstRanker.com

FirstRanker.com
Firstranker's choice
www.FirstRanker.com www.FirstRanker.com

5. A Line inclined to both Hp and Vp

(Pictorial presentation)

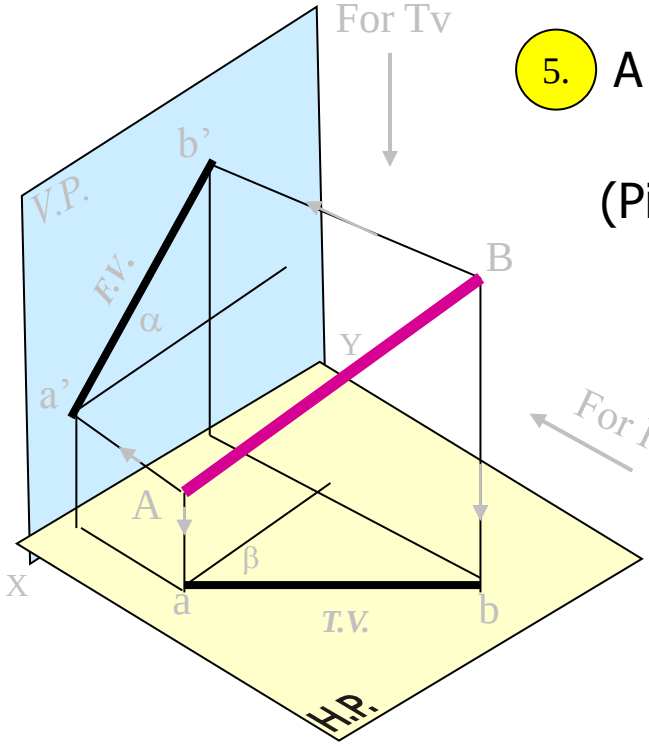

On removal of object i.e. Line AB
Fv as a image on Vp.
Tv as a image on Hp,

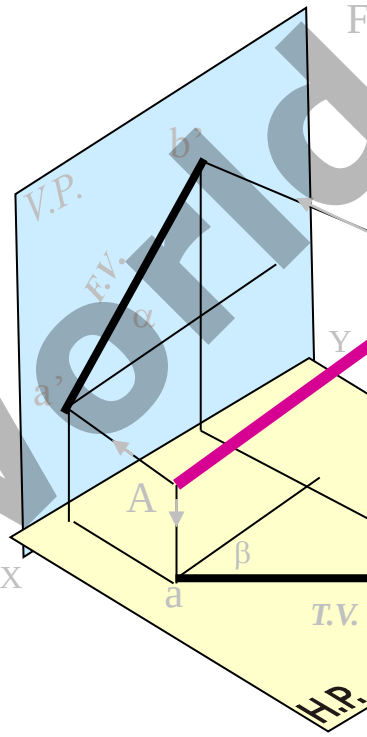

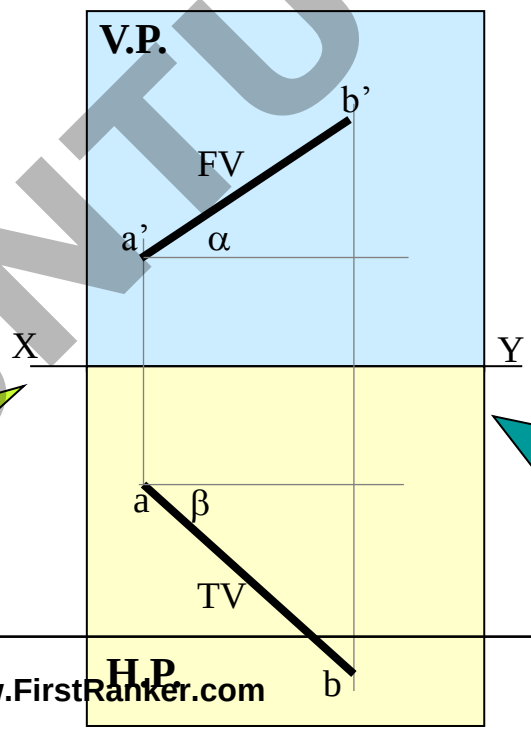

Orthographic Projections
Fv is seen on Vp clearly.
To see Tv clearly, HP is rotated 90⁰ downwards,
Hence it comes below xy.

Note These
Both Fv & Tv are
(No view is pa
Both Fv & Tv are r
(No view shows

AllJNTU World

www.FirstRanker.com

FirstRanker.com
Firstranker's choice
www.FirstRanker.com www.FirstRanker.com

Orthographic Projections
Means Fv & Tv of Line AB
are shown below,
with their apparent Inclinations
α & β

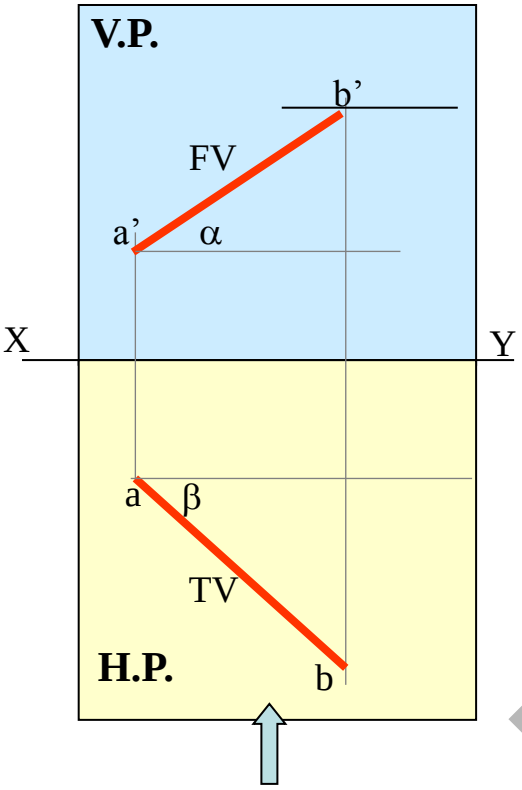

Here TV (ab) is not // to XY line
Hence it's corresponding FV
a' b' is not showing
True Length &
True Inclination with Hp.

Note the procedure
When Fv & Tv known,
How to find True Length.
(Views are rotated to determine
True Length & it's inclinations
with Hp & Vp).

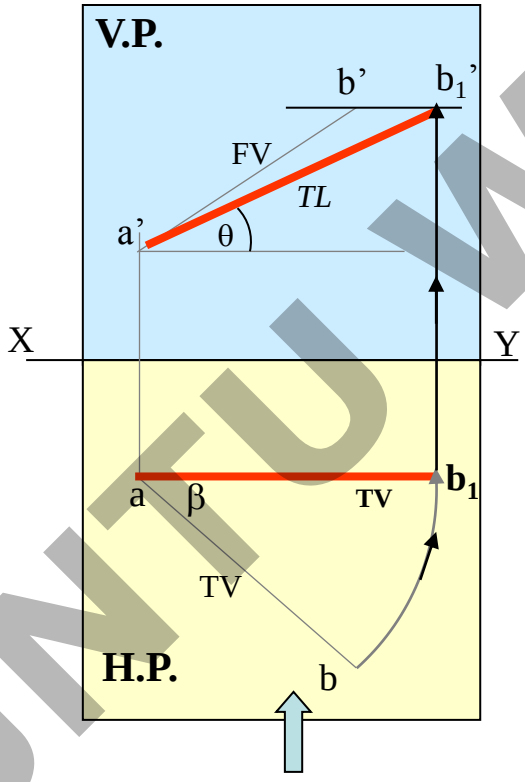

In this sketch, TV is rotated
and made // to XY line.
Hence it's corresponding
FV a' b1' Is showing
True Length
&
True Inclination with Hp.

Note the
When True Le
How to loca
(Component a'b
which is fur
to deter

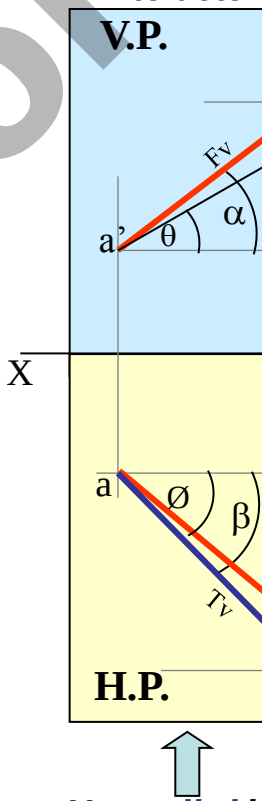

Here a'b1' is
of TL ab1 give
Hence it is b
Locus of a' an
to get point b'
Similarly draw
of other TL(a'b1')

All JNTU World

www.FirstRanker.com

The most important diagram showing graphical relations among all important parameters of this topic.
Study and memorize it as a ***CIRCUIT DIAGRAM***
And use in solving various problems.

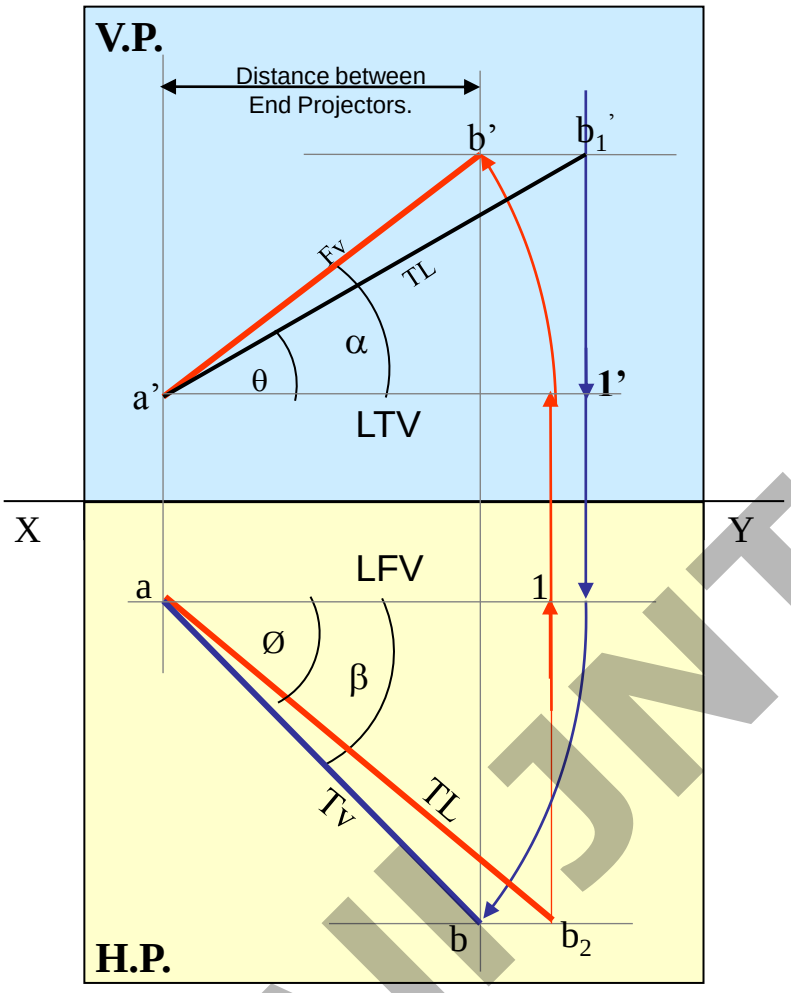

1) True Length (TL) – a' b_1' & a b_2
2) Angle of TL with Hp - θ
3) Angle of TL with Vp – Ø
4) Angle of FV with xy – α
5) Angle of TV with xy – β
6) LTV (length of FV) – Component
7) LFV (length of TV) – Component
8) Position of A- **Distances of a &**
9) Position of B- **Distances of b &**
10) Distance between End Projecto

NOTE this

θ & α Construct with ***a'***
Ø & β Construct with ***a***
b' & b_1' on same locus.
b & b_1 on same locus.

Also Remember

True Length is never rotated. It's hor is drawn & it is further rotated t

Views are always rotated, made hor extended to locate TL, θ

AllJNTU World

GROUP (A)

GENERAL CASES OF THE LINE INCLINED TO BOTH H
(based on 10 parameters).

PROBLEM 1)

Line AB is 75 mm long and it is 30^0 & 40^0 Inclined to Hp & Vp respectively. End A is 12mm above Hp and 10 mm in front of Vp.
Draw projections. Line is in 1st quadrant.

SOLUTION STEPS:

1) Draw xy line and one projector.
2) Locate a' 12mm above xy line & a 10mm below xy line.
3) Take 30^0 angle from a' & 40^0 from a and mark TL I.e. 75mm on both lines. Name those points b_1' and b_1 respectively.
4) Join both points with a' and a resp.
5) Draw horizontal lines (Locus) from both points.
6) Draw horizontal component of TL a b_1 from point b_1 and name it 1. (the length a-1 gives length of Fv as we have seen already.)
7) Extend it up to locus of a' and rotating a' as center locate b' as shown. Join a' b' as Fv.
8) From b' drop a projector down ward & get point b. Join a & b I.e. Tv.

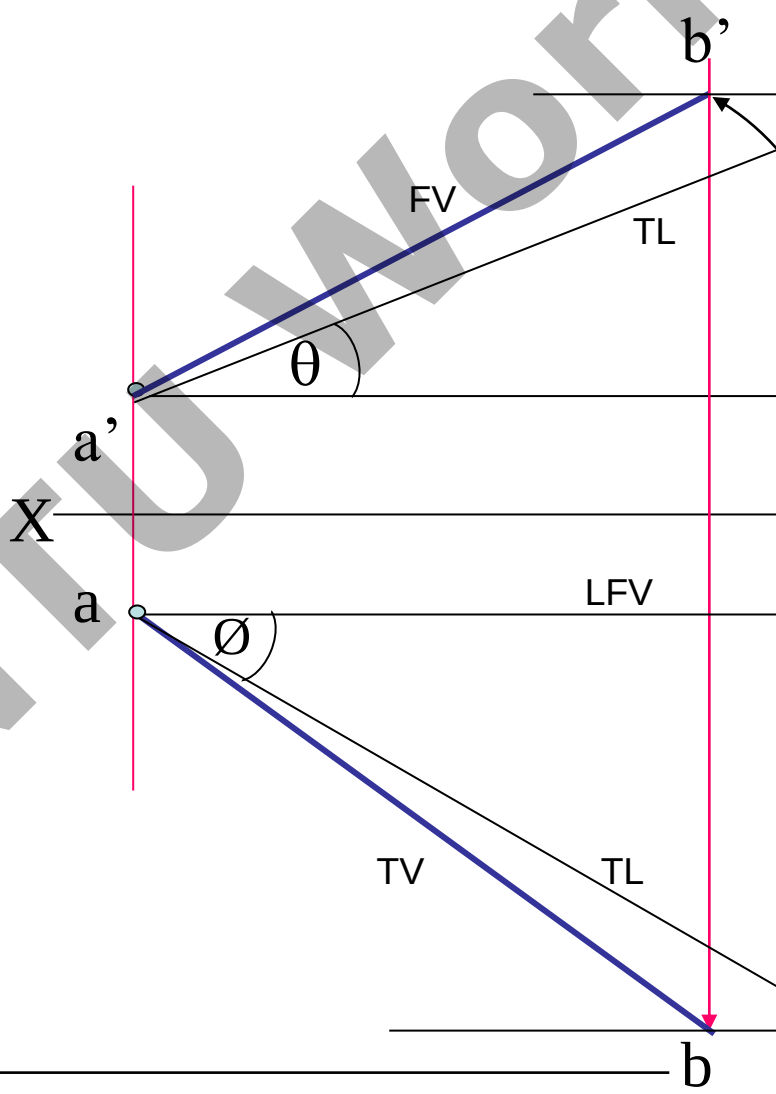

All JNTU World

PROBLEM 2:

Line AB 75mm long makes 45^0 inclination with Vp while it's Fv makes 55^0. End A is 10 mm above Hp and 15 mm in front of Vp.If line is in 1st quadrant draw it's projections and find it's inclination with Hp.

Solution Steps:-

1.Draw x-y line.
2.Draw one projector for a' & a
3.Locate *a'* 10mm above x-y & Tv *a* 15 mm below xy.
4.Draw a line 45^0 inclined to xy from point *a* and cut TL 75 mm on it and name that point b_1 Draw locus from point b_1
5.Take 55^0 angle from *a'* for Fv above xy line.
6.Draw a vertical line from b_1 up to locus of a and name it *1*. It is horizontal component of TL & is LFV.
7.Continue it to locus of *a'* and rotate upward up to the line of Fv and name it *b'*.This *a' b'* line is Fv.
8. Drop a projector from b' on locus from point b_1 and name intersecting point *b*. Line *a b* is Tv of line AB.
9.Draw locus from *b'* and from *a'* with TL distance cut point b_1'
10.Join *a' b_1'* as TL and measure it's angle at *a'*.
It will be true angle of line with HP.

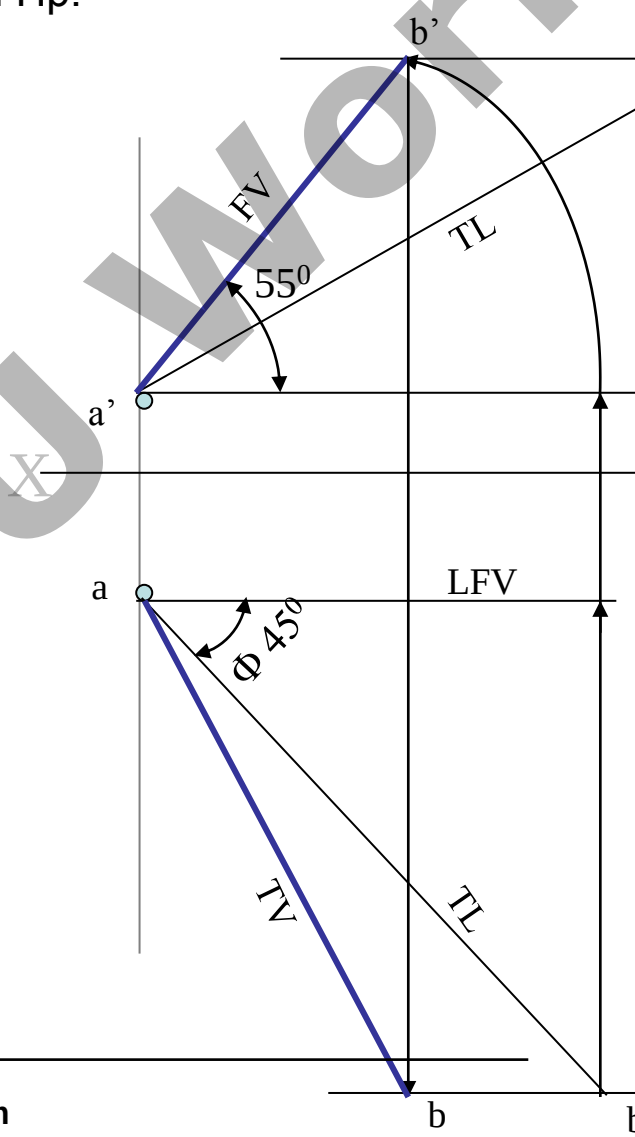

All JNTU World

PROBLEM 3:

Fv of line AB is 50^0 inclined to xy and measures 55 mm long while it's Tv is 60^0 inclined to xy line. If end A is 10 mm above Hp and 15 mm in front of Vp, draw it's projections,find TL, inclinations of line with Hp & Vp.

SOLUTION STEPS:

1.Draw xy line and one projector.
2.Locate a' 10 mm above xy and a 15 mm below xy line.
3.Draw locus from these points.
4.Draw Fv 50^0 to xy from a' and mark b' Cutting 55mm on it.
5.Similarly draw Tv 60^0 to xy from a & drawing projector from b' Locate point b and join a b.
6.Then rotating views as shown, locate True Lengths ab_1 & $a'b_1'$ and their angles with Hp and Vp.

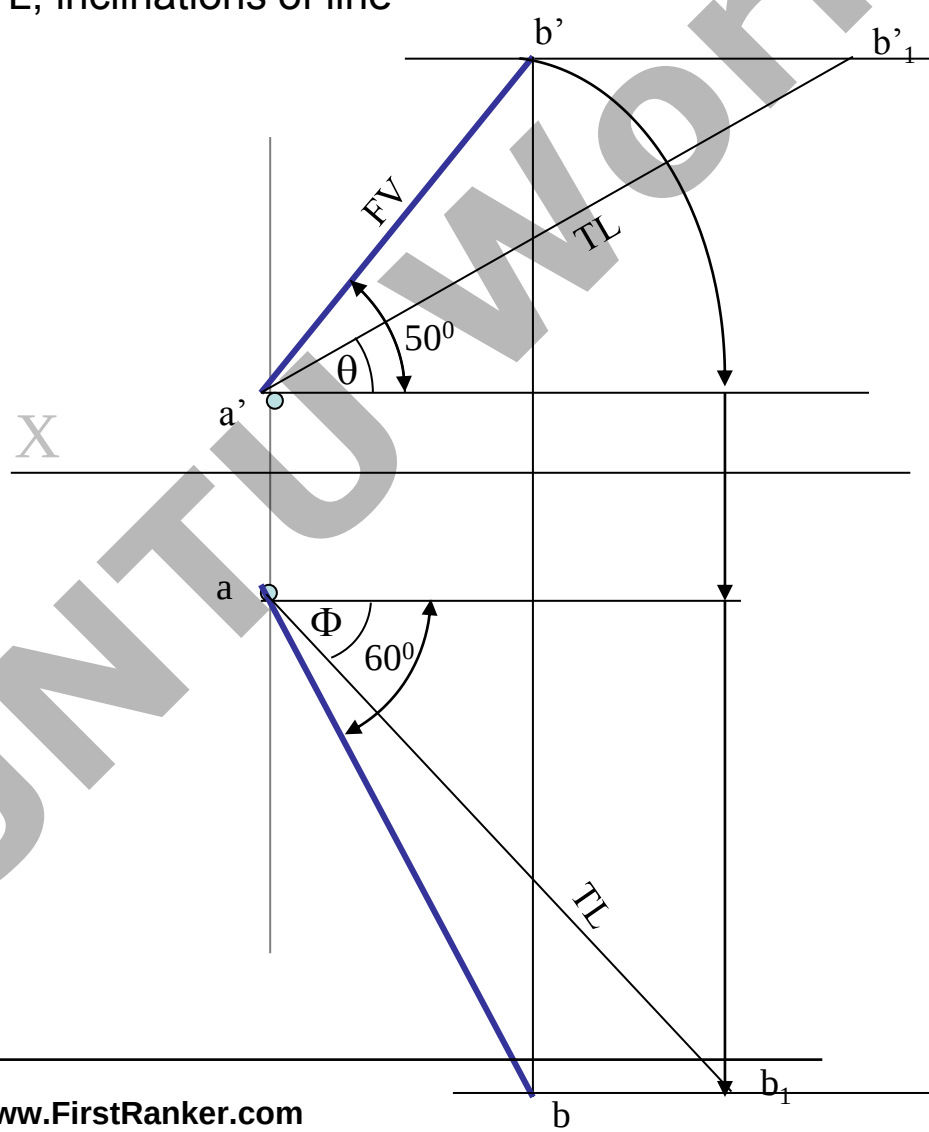

All JNTU World

PROBLEM 4 :-

Line AB is 75 mm long .It's Fv and Tv measure 50 mm & 60 mm long respectively. End A is 10 mm above Hp and 15 mm in front of Vp. Draw projections of line AB if end B is in first quadrant.Find angle with Hp and Vp.

SOLUTION STEPS:

1.Draw xy line and one projector.
2.Locate a' 10 mm above xy and a 15 mm below xy line.
3.Draw locus from these points.
4.Cut 60mm distance on locus of a' & mark 1' on it as it is LTV.
5.Similarly Similarly cut 50mm on locus of a and mark point 1 as it is LFV.
6.From 1' draw a vertical line upward and from a' taking TL (75mm) in compass, mark b'_1 point on it. Join a' b'_1 points.
7. Draw locus from b'_1
8. With same steps below get b_1 point and draw also locus from it.
9. Now rotating one of the components I.e. a-1 locate b' and join a' with it to get Fv.
10. Locate tv similarly and measure Angles θ & Φ

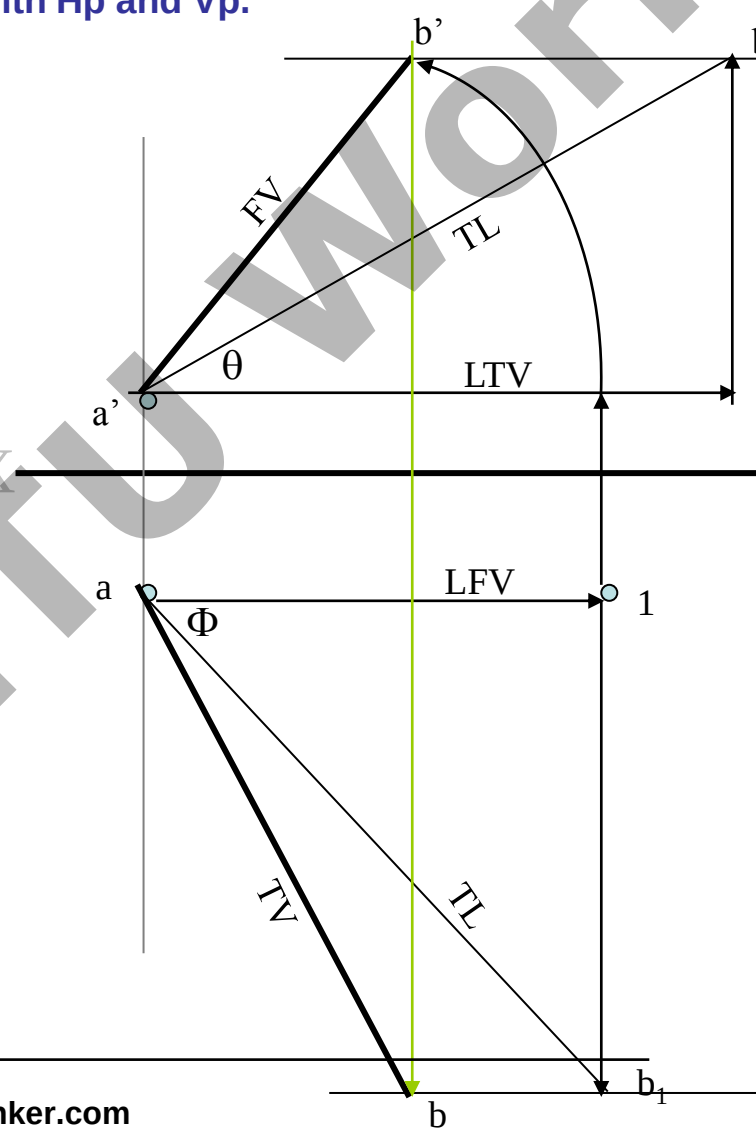

All JNTU World

GROUP (B)

PROBLEMS INVOLVING TRACES OF THE LINE

TRACES OF THE LINE:-

THESE ARE THE POINTS OF INTERSECTIONS OF A LINE (OR IT'S WITH RESPECTIVE REFFERENCE PLANES.

A LINE ITSELF OR IT'S EXTENSION, WHERE EVER TOUCHES H.P., THAT POINT IS CALLED TRACE OF THE LINE ON H.P.(IT IS CALLE

SIMILARLY, A LINE ITSELF OR IT'S EXTENSION, WHERE EVER TOU THAT POINT IS CALLED TRACE OF THE LINE ON V.P.(IT IS CALLED

V.T.:- It is a point on **Vp**.
Hence it is called ***Fv*** of a point in **Vp.**
Hence it's ***Tv*** comes on XY line.(Here onward named as **v)**

H.T.:- It is a point on **Hp.**
Hence it is called ***Tv*** of a point in **Hp**.
Hence it's ***Fv*** comes on **XY line**.(Here onward named as **'h')**

All JNTU World

FirstRanker.com
Firstranker's choice
www.FirstRanker.com www.FirstRanker.com

STEPS TO LOCATE HT.
(WHEN PROJECTIONS ARE GIVEN.)

1. **Begin with FV. Extend FV up to XY line.**
2. **Name this point h'**
   (as it is a Fv of a point in Hp)
3. **Draw one projector from h'.**
4. **Now extend Tv to meet this projector.**
   This point is HT

STEPS TO LOCATE VT.
(WHEN PROJECTIONS ARE GIVEN.)

1. **Begin with TV. Extend TV up to XY line.**
2. **Name this point v**
   (as it is a Tv of a point in Vp)
3. **Draw one projector from v.**
4. **Now extend Fv to meet this projector.**
   This point is VT

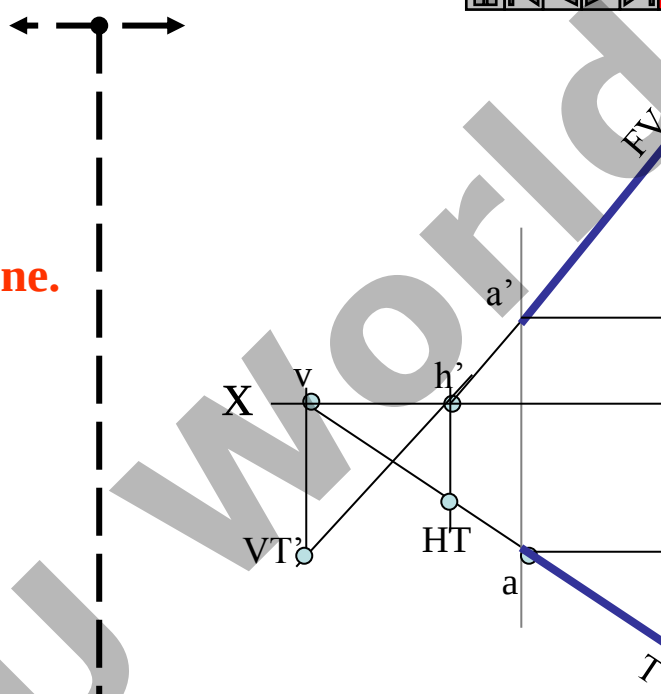

Observe & note :-

1. Points h' & v always on x-y lin
2. VT' & v always on one projecto
3. HT & h' always on one project
4. FV - h'- VT' always co-linear.
5. TV - v - HT always co-linear.

These points solve next th

All JNTU World

www.FirstRanker.com

PROBLEM 6 :- Fv of line AB makes 45^0 angle with XY line and measures 60 mm. Line's Tv makes 30^0 with XY line. End A is 15 mm above Hp and it's VT is 10 mm below Hp. Draw projections of line AB,determine inclinations with Hp & Vp and locate HT, VT.

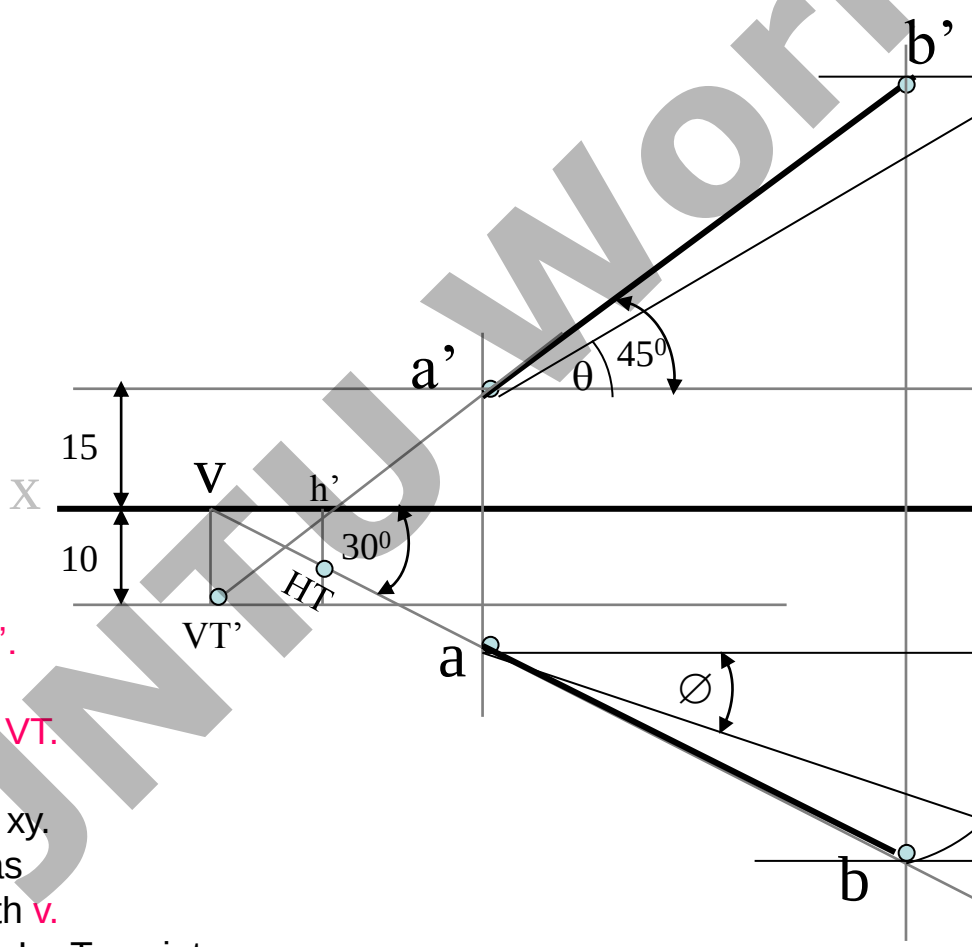

SOLUTION STEPS:-

Draw xy line, one projector and locate fv a' 15 mm above xy.
Take 45^0 angle from a' and marking 60 mm on it locate point b'.
Draw locus of VT, 10 mm below xy & extending Fv to this locus locate VT. as fv-h'-vt' lie on one st.line.
Draw projector from vt, locate v on xy.
From v take 30^0 angle downward as Tv and it's inclination can begin with v.
Draw projector from b' and locate b I.e.Tv point.
Now rotating views as usual TL and it's inclinations can be found.
Name extension of Fv, touching xy as h' and below it, on extension of Tv, locate HT.

All JNTU World

PROBLEM 7 :

One end of line AB is 10mm above Hp and other end is 100 mm in-front of Vp. It's Fv is 45⁰ inclined to xy while it's HT & VT are 45mm and 30 mm below xy respectiv Draw projections and find TL with it's inclinations with Hp & VP.

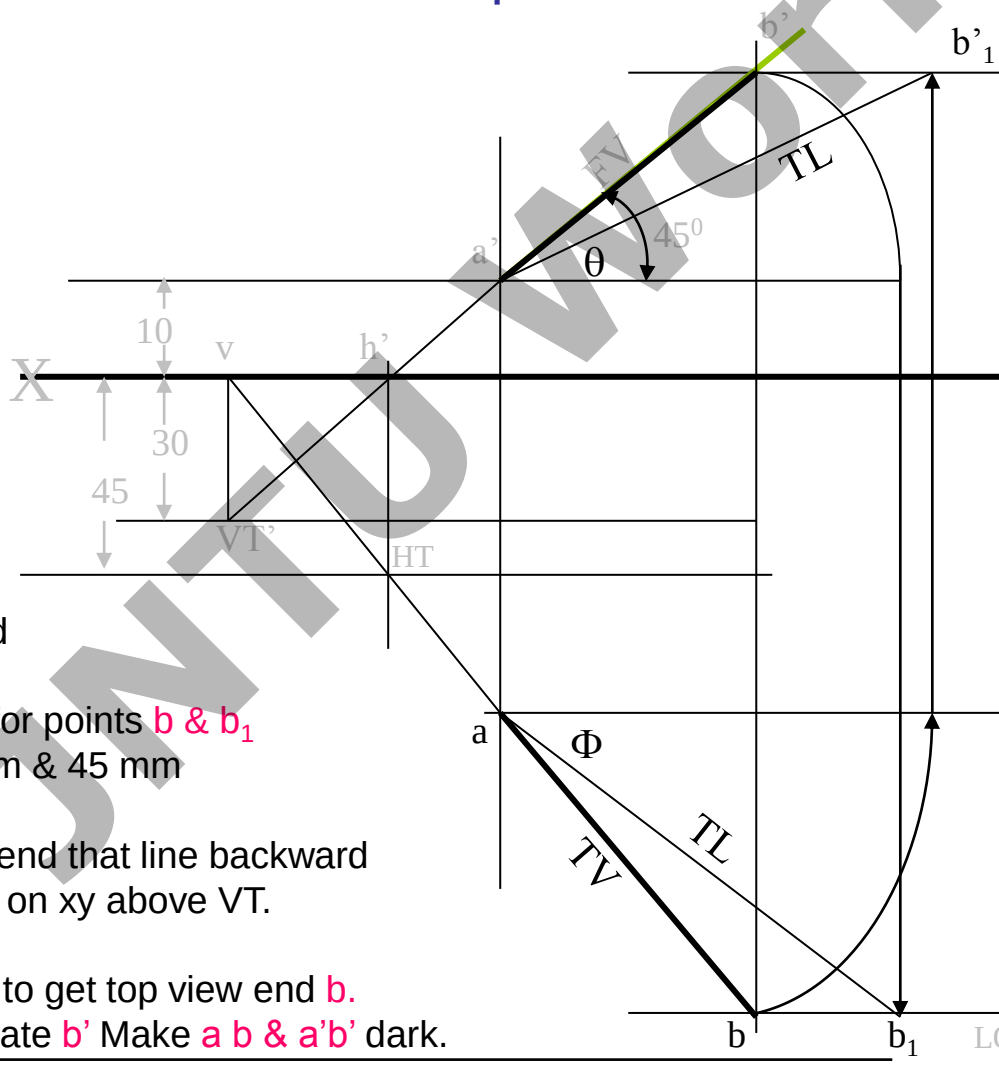

SOLUTION STEPS:-

Draw xy line, one projector and locate a' 10 mm above xy.
Draw locus 100 mm below xy for points b & b_1
Draw loci for VT and HT, 30 mm & 45 mm below xy respectively.
Take 45^0 angle from a' and extend that line backward to locate h' and VT, & Locate v on xy above VT.
Locate HT below h' as shown.
Then join v – HT – and extend to get top view end b.
Draw projector upward and locate b' Make a b & a'b' dark.
Now as usual rotating views find TL and it's inclinations.

All JNTU World

PROBLEM 8 :- Projectors drawn from HT and VT of a line AB are 80 mm apart and those drawn from it's ends are 50 mm apart. End A is 10 mm above Hp, VT is 35 mm below Hp while it's HT is 45 mm in front of Vp. Draw projections, locate traces and find TL of line & inclinations with Hp and Vp.

SOLUTION STEPS:-

1.Draw xy line and two projectors, 80 mm apart and locate HT & VT , 35 mm below xy and 55 mm above xy respectively on these projectors.

2.Locate h' and v on xy as usual.

3.Now just like previous two problems, Extending certain lines complete Fv & Tv And as usual find TL and it's inclinations.

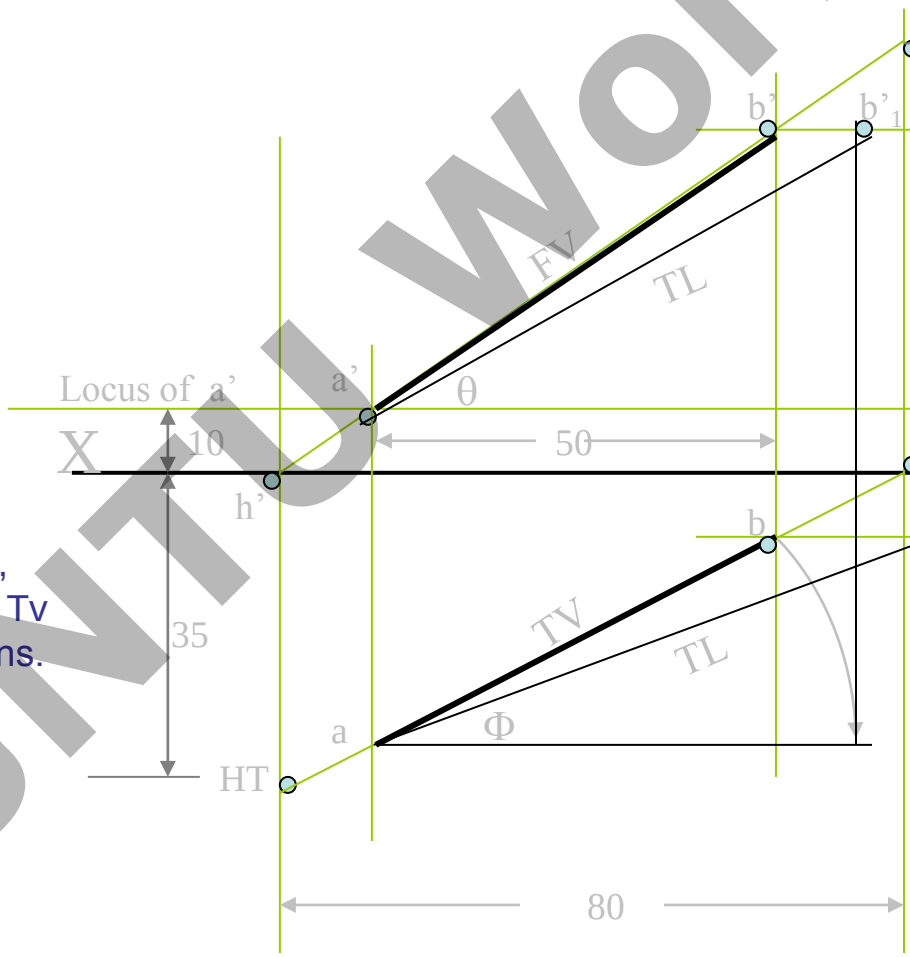

All JNTU World

FirstRanker.com
Firstranker's choice
www.FirstRanker.com www.FirstRanker.com

Instead of considering a & a' as projections of first point,
if v & VT' are considered as first point , then true inclinations of
Hp & Vp i.e. angles θ & Φ can be constructed with points VT' & V re

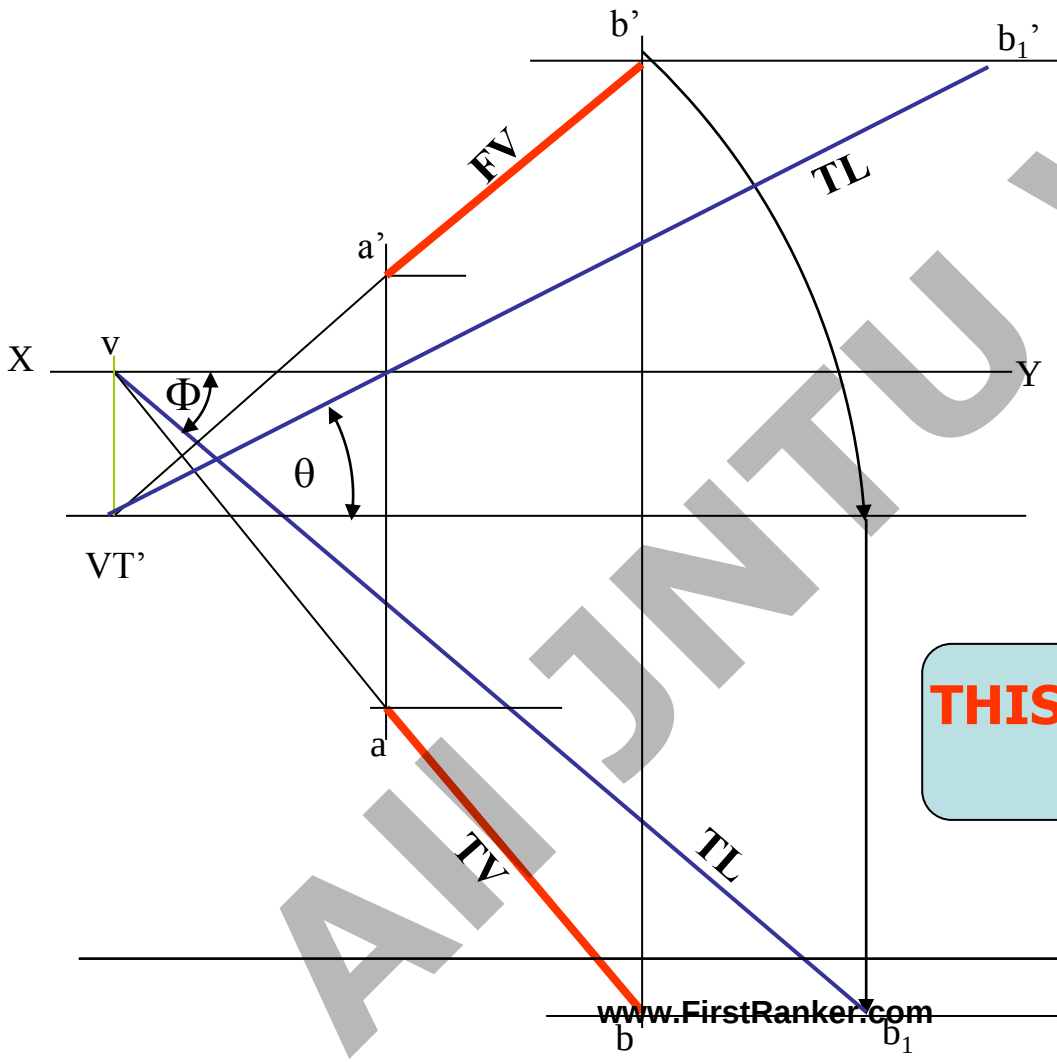

Then from point
angles β & Φ can
&
From point VT
angles α & θ can

THIS CONCEPT IS USE
NEXT *THREE* PRO

All JNTU World
www.FirstRanker.com

PROBLEM 9 :-

Line AB 100 mm long is 30^0 and 45^0 inclined to Hp & Vp respectively. End A is 10 mm above Hp and it's VT is 20 mm below Hp .Draw projections of the line and it's HT.

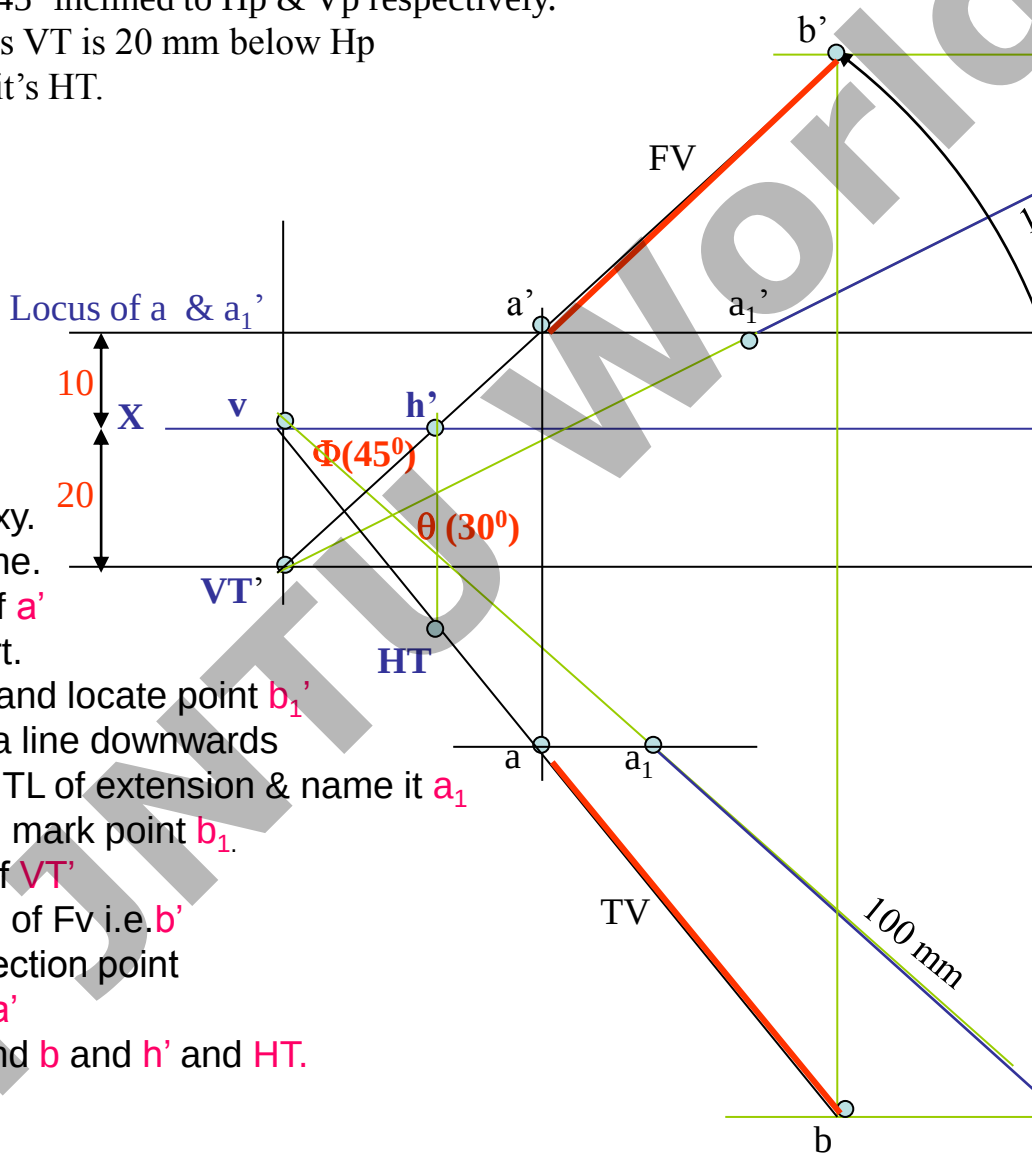

SOLUTION STEPS:-

Draw xy, one projector and locate on it VT and V.
Draw locus of a' 10 mm above xy.
Take 30^0 from VT and draw a line.
Where it intersects with locus of a' name it a_1' as it is TL of that part.
From a_1' cut 100 mm (TL) on it and locate point b_1'
Now from v take 45^0 and draw a line downwards
& Mark on it distance VT-a_1' I.e.TL of extension & name it a_1
Extend this line by 100 mm and mark point b_1.
Draw it's component on locus of VT'
& further rotate to get other end of Fv i.e.b'
Join it with VT' and mark intersection point (with locus of a_1') and name it a'
Now as usual locate points a and b and h' and HT.

All JNTU World

PROBLEM 10 :-

A line AB is 75 mm long. It's Fv & Tv make 45^0 and 60^0 inclinations with X-Y line resp End A is 15 mm above Hp and VT is 20 mm below Xy line. Line is in first quadrant. Draw projections, find inclinations with Hp & Vp. Also locate HT.

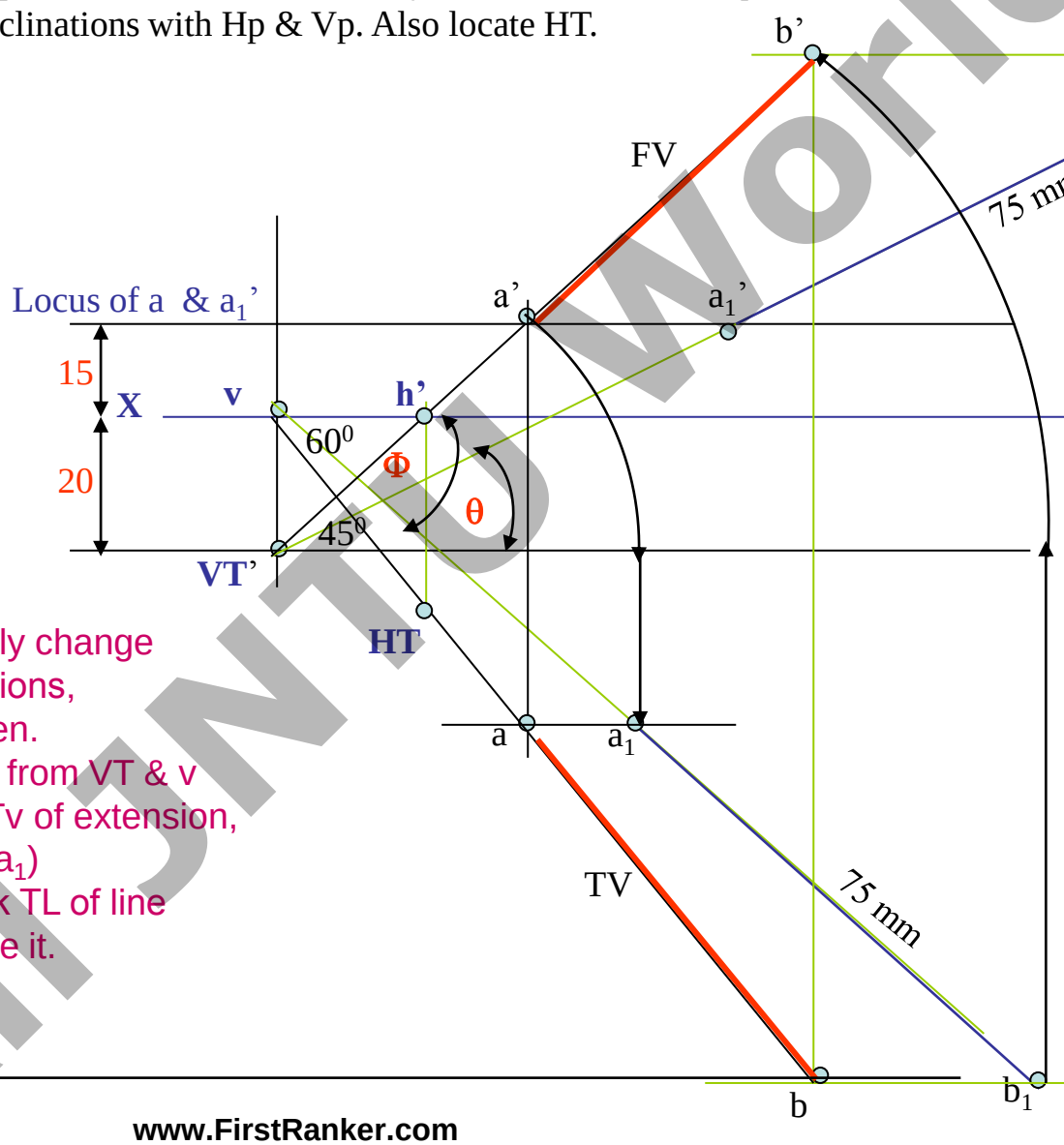

SOLUTION STEPS:-

Similar to the previous only change is instead of line's inclinations, views inclinations are given.
So first take those angles from VT & v Properly, construct Fv & Tv of extension, then determine it's TL(V-a_1) and on it's extension mark TL of line and proceed and complete it.

All JNTU World

PROBLEM 11 :- The projectors drawn from VT & end A of line AB are 40mm apart. End A is 15mm above Hp and 25 mm in front of Vp. VT of line is 20 mm below Hp. If line is 75mm long, draw it's projections, find inclinations with HP & Vp

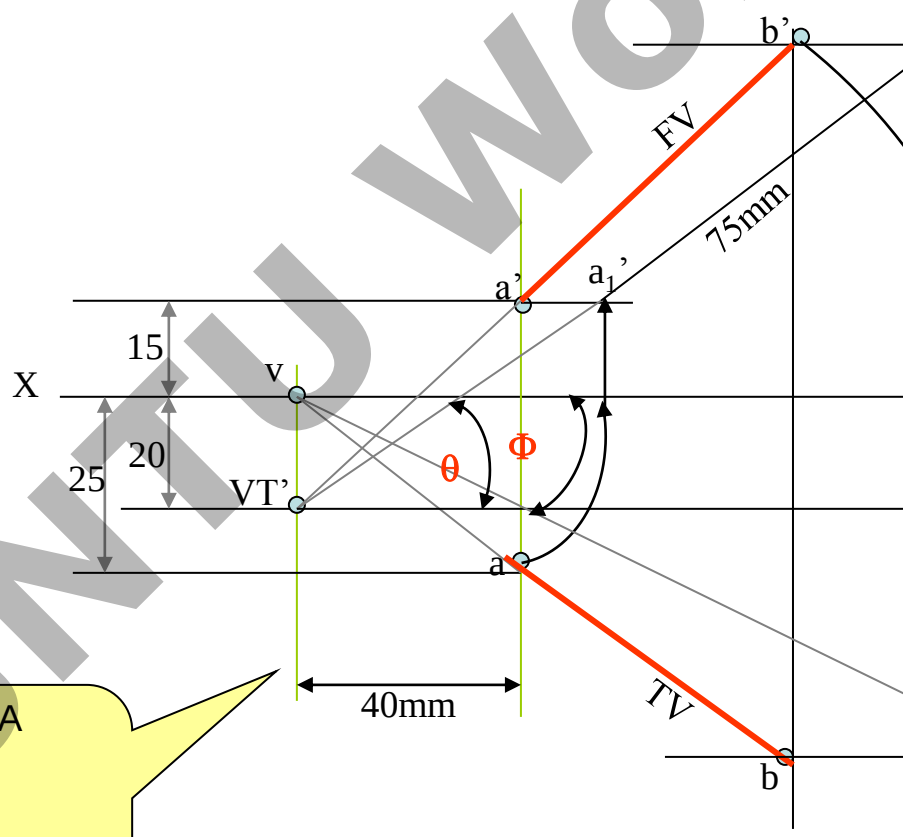

Draw two projectors for VT & end A
Locate these points and then
YES !
YOU CAN COMPLETE IT.

All JNTU World

GROUP (C)

CASES OF THE LINES IN A.V.P., A.I.P. & PROFILE PLAN

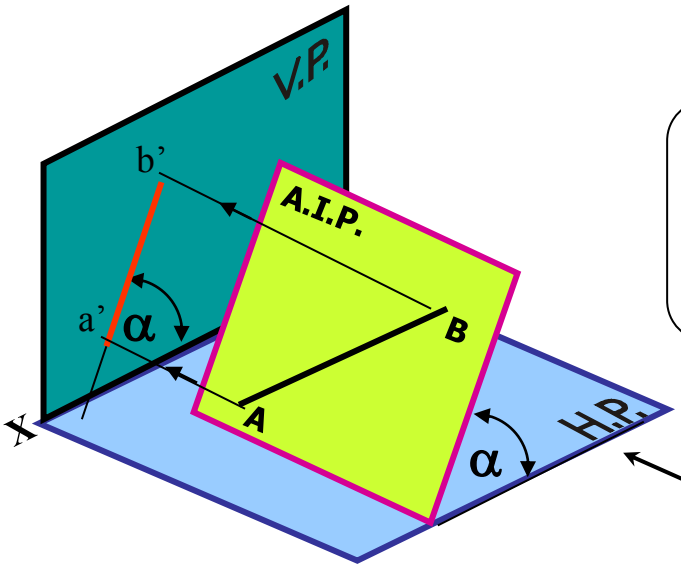

Line AB is in AIP as shown in above figure n
It's FV (a'b') is shown projected on Vp.(Looking in arr
Here one can clearly see that the
Inclination of AIP with HP = Inclination of FV

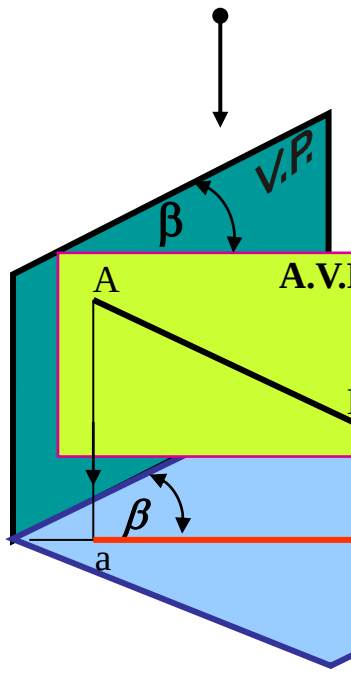

Line AB is in AVP as shown in above figure no 2..
It's TV (a b) is shown projected on Hp.(Looking in arrow direction)
Here one can clearly see that the
Inclination of AVP with VP = Inclination of TV with XY line

All JNTU World

FirstRanker.com
Firstranker's choice
www.FirstRanker.com www.FirstRanker.com

LINE IN A PROFILE PLANE (MEANS IN A PLANE PERPENDICULAR TO BO

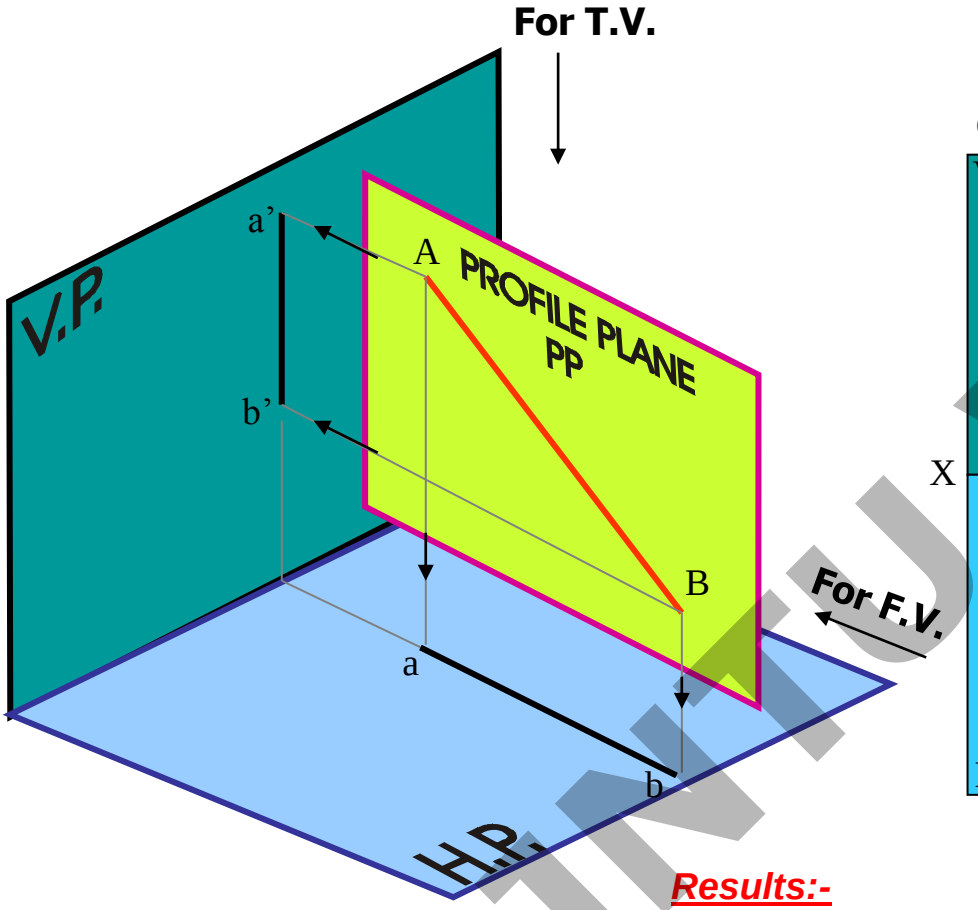

ORTHOGRAPHIC PATTERN OF LINE I

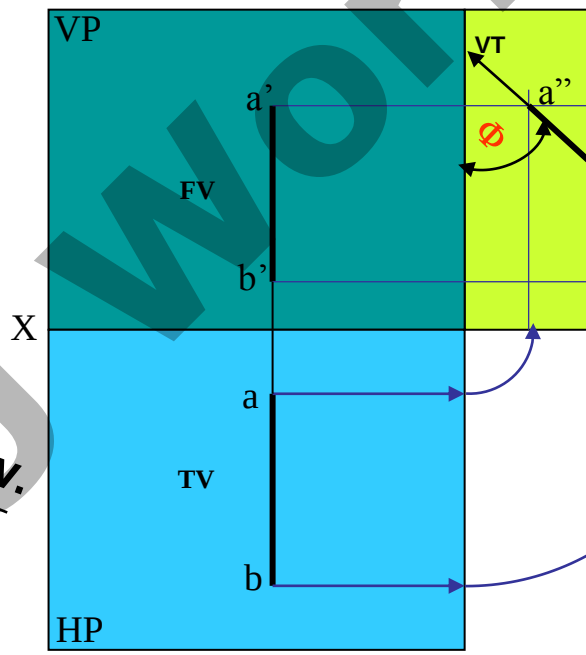

Results:-

1. TV & FV both are vertical, hence arrive on one s
2. It's Side View shows True Length (TL)
3. Sum of it's inclinations with HP & VP equals to 9
4. It's HT & VT arrive on same projector and can be From Side View.

OBSERVE CAREFULLY ABOVE GIVEN ILLUSTRATION AND 2nd SOLVED PROBL

AllJNTUWorld
www.FirstRanker.com

PROBLEM 12 :- Line AB 80 mm long, makes 30^0 angle with Hp and lies in an Aux.Vertical Plane 45^0 inclined to Vp.
End A is 15 mm above Hp and VT is 10 mm below X-y line.
Draw projections, fine angle with Vp and Ht.

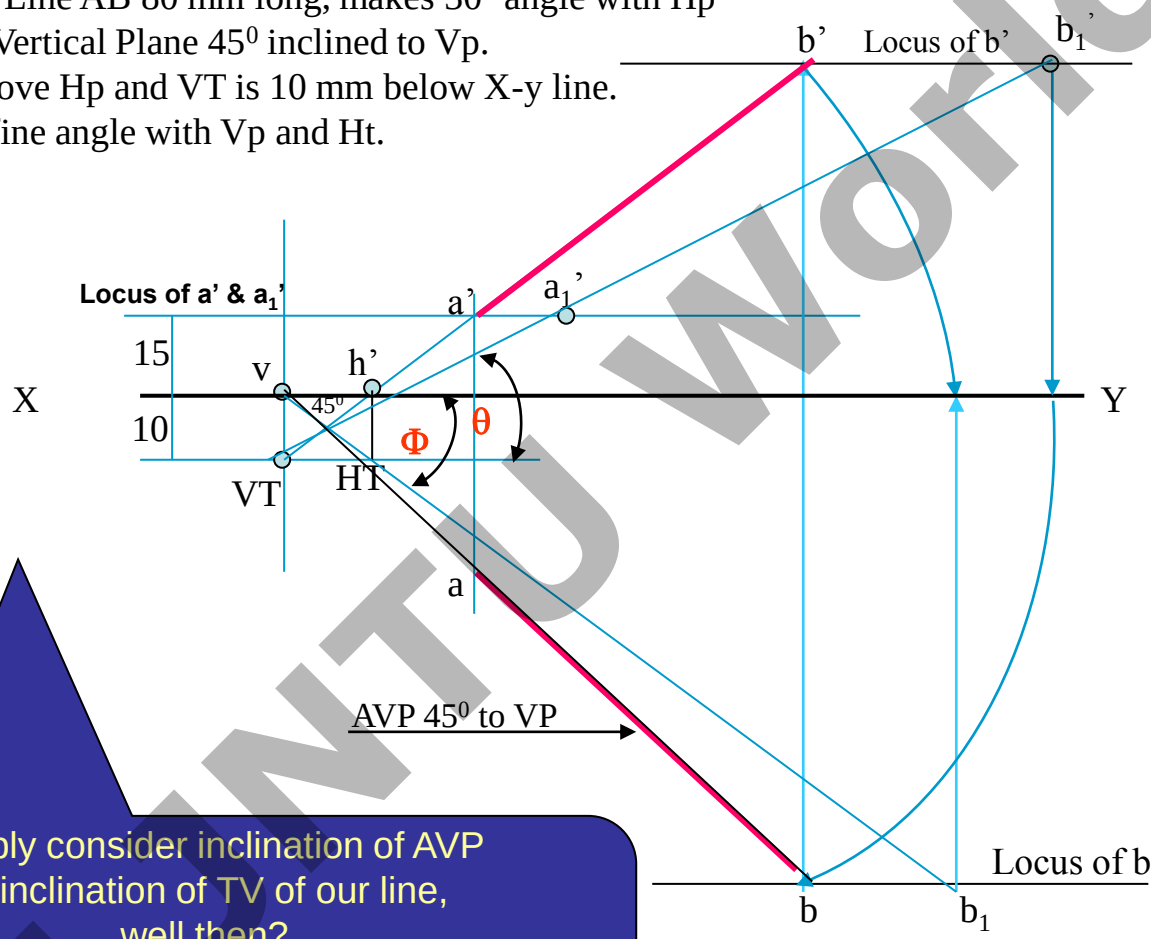

Simply consider inclination of AVP as inclination of TV of our line, well then?
You sure can complete it as previous problems! Go ahead!!

All JNTU World

FirstRanker.com
Firstranker's choice
www.FirstRanker.com www.FirstRanker.com

PROBLEM 13 :- A line AB, 75mm long, has one end A in Vp. Other end B is 15 mm above H and 50 mm in front of Vp.Draw the projections of the line when sum of it's Inclinations with HP & Vp is 90^0, means it is lying in a profile plane. Find true angles with ref.planes and it's traces.

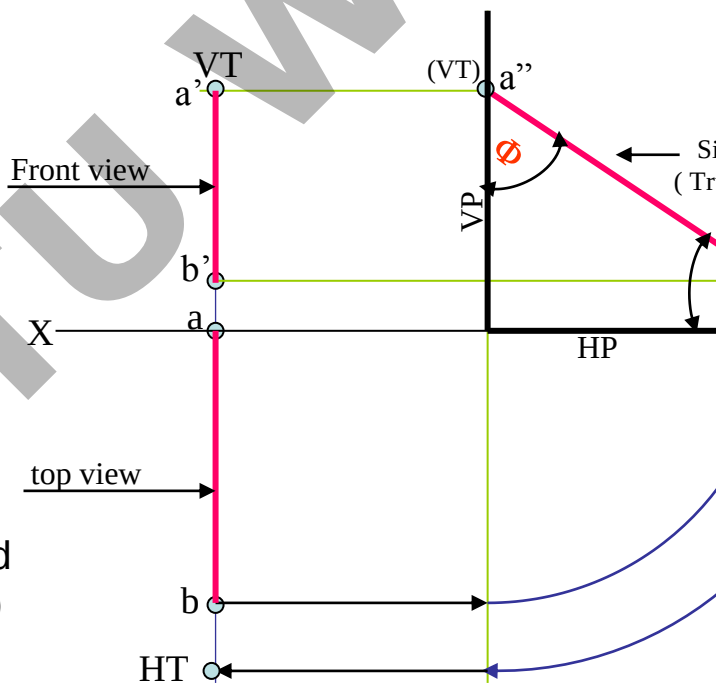

SOLUTION STEPS:-

After drawing xy line and one projector
Locate top view of A I.e point a on xy as
It is in Vp,
Locate Fv of B i.e.b'15 mm above xy as
it is above Hp.and Tv of B i.e. b, 50 mm
below xy asit is 50 mm in front of Vp
Draw side view structure of Vp and Hp
and locate S.V. of point B i.e. b''
From this point cut 75 mm distance on Vp and
Mark a'' as A is in Vp. (This is also VT of line.)
From this point draw locus to left & get a'
Extend SV up to Hp. It will be HT. As it is a Tv
Rotate it and bring it on projector of b.
Now as discussed earlier SV gives TL of line
and at the same time on extension up to Hp & Vp
gives inclinations with those panes.

All JNTU World

www.FirstRanker.com

FirstRanker.com
Firstranker's choice
www.FirstRanker.com www.FirstRanker.com

APPLICATIONS OF PRINCIPLES OF PROJECTIONS OF LINE

IN SOLVING CASES OF DIFFERENT PRACTICAL SITUATIONS.

In these types of problems some situation in the field
or
some object will be described .
It's relation with Ground (HP)
And
a Wall or some vertical object (VP) will be given.

Indirectly information regarding Fv & Tv of some line or lines,
inclined to both reference Planes will be given
and
you are supposed to draw it's projections
and
further to determine it's true Length and it's inclinations with groun

Here various problems along with
actual pictures of those situations are given
for you to understand those clearly.
Now looking for views in given ARROW directions,
YOU are supposed to draw projections & find answers,
Off course you must visualize the situation properly.

CHECK YOUR A
WITH THE SO
GIVEN IN TH
ALL THE E

All JNTU World
www.FirstRanker.com

PROBLEM 14:-Two objects, a flower (A) and an orange (B) are within a rectangular compoun
whose P & Q are walls meeting at 90^0. Flower A is 1M & 5.5 M from walls P & Q respectivel
Orange B is 4M & 1.5M from walls P & Q respectively. Drawing projection, find distance betwe
If flower is 1.5 M and orange is 3.5 M above the ground. Consider suitable scale..

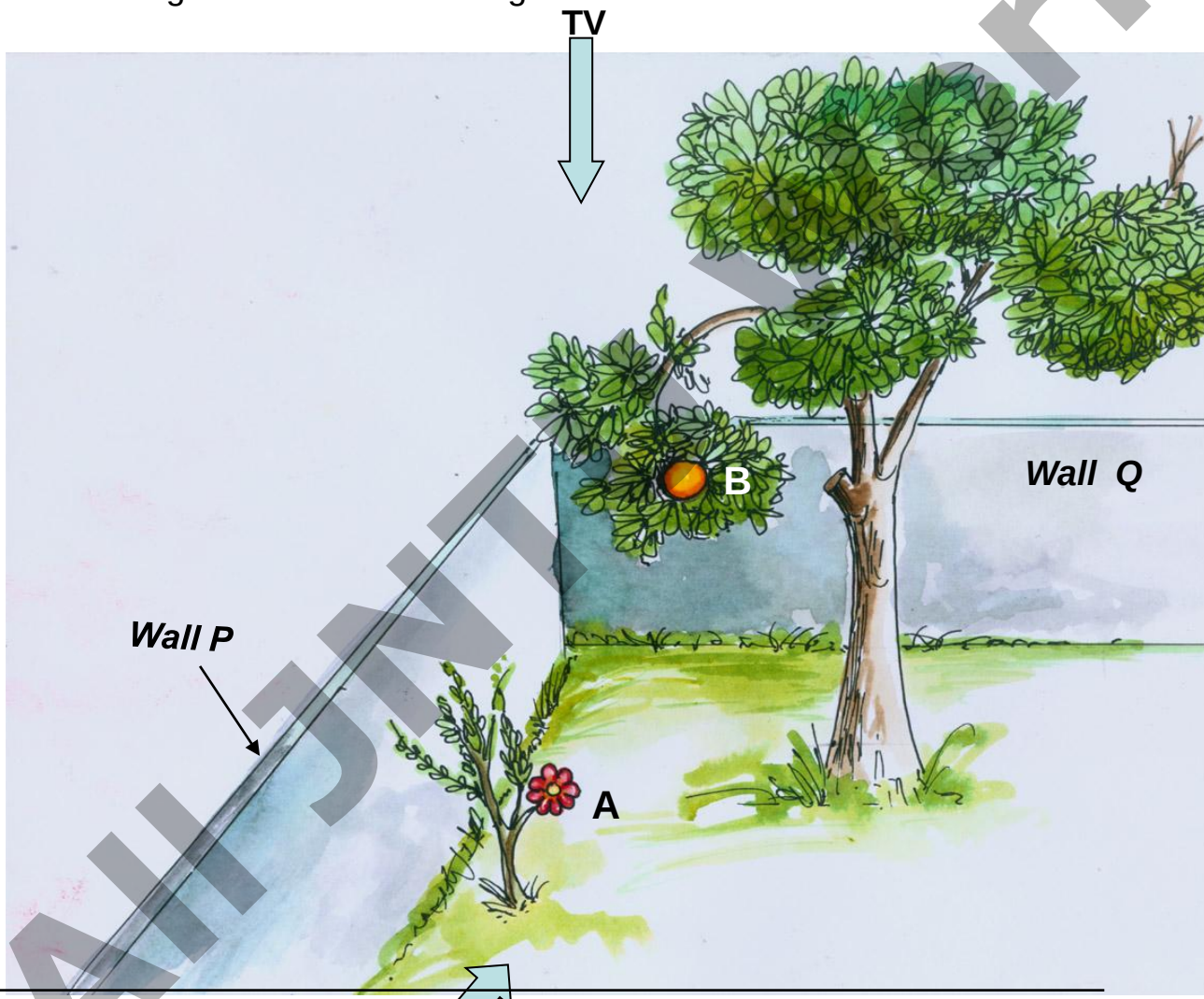

AKJINTI World

PROBLEM 15 :- Two mangos on a tree A & B are 1.5 m and 3.00 m above ground and those are 1.2 m & 1.5 m from a 0.3 m thick wall but on opposite sides of it.
If the distance measured between them along the ground and parallel to wall is 2.6 m, Then find real distance between them by drawing their projections.

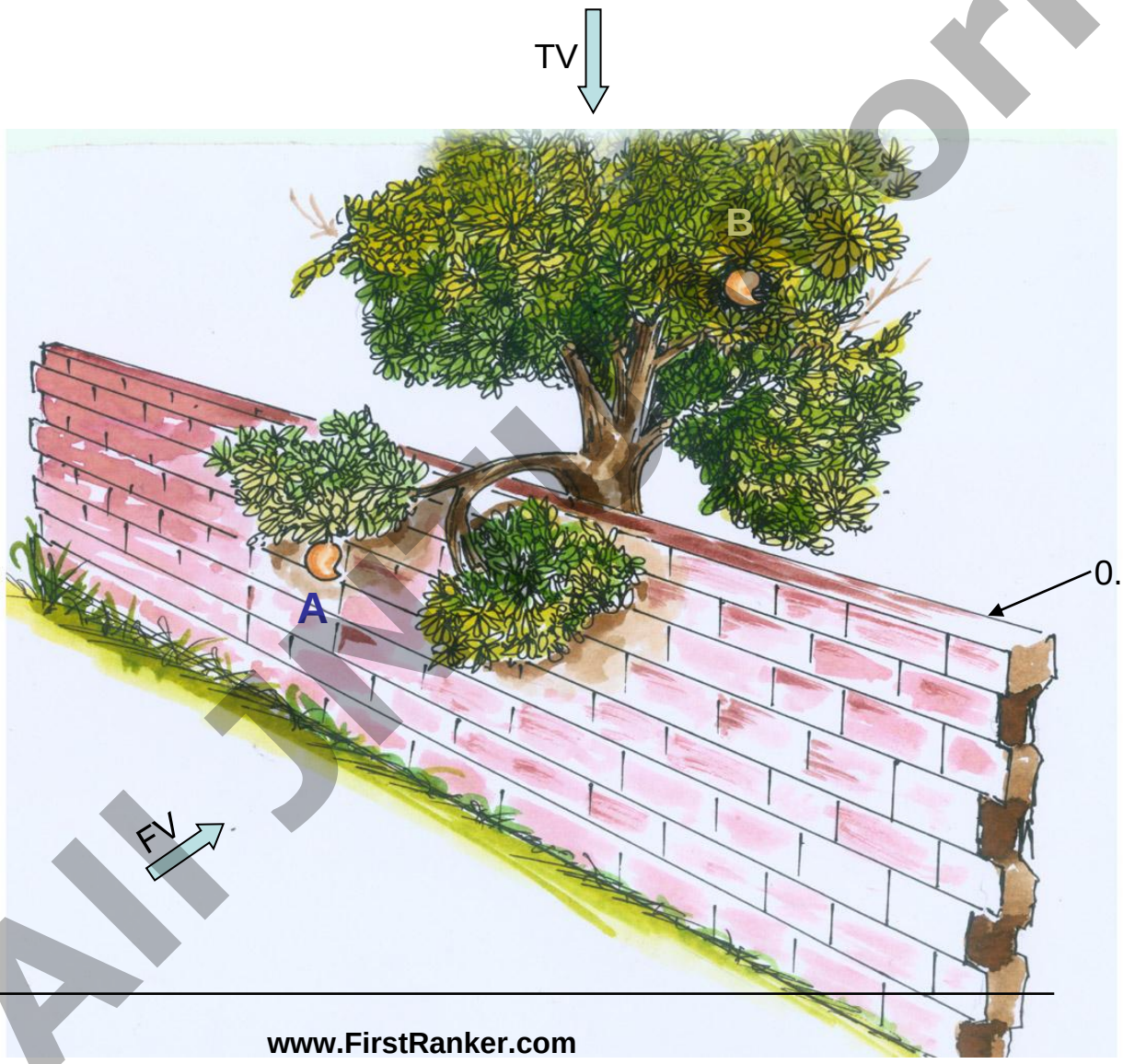

All JNTU World

PROBLEM 16 :- oa, ob & oc are three lines, 25mm, 45mm and 65mm long respectively.All equally inclined and the shortest is vertical.This fig. is TV of three rods OA, OB and OC whose ends A,B & C are on ground and end O is 100mm above ground. Draw their projections and find length of each along with their angles with ground.

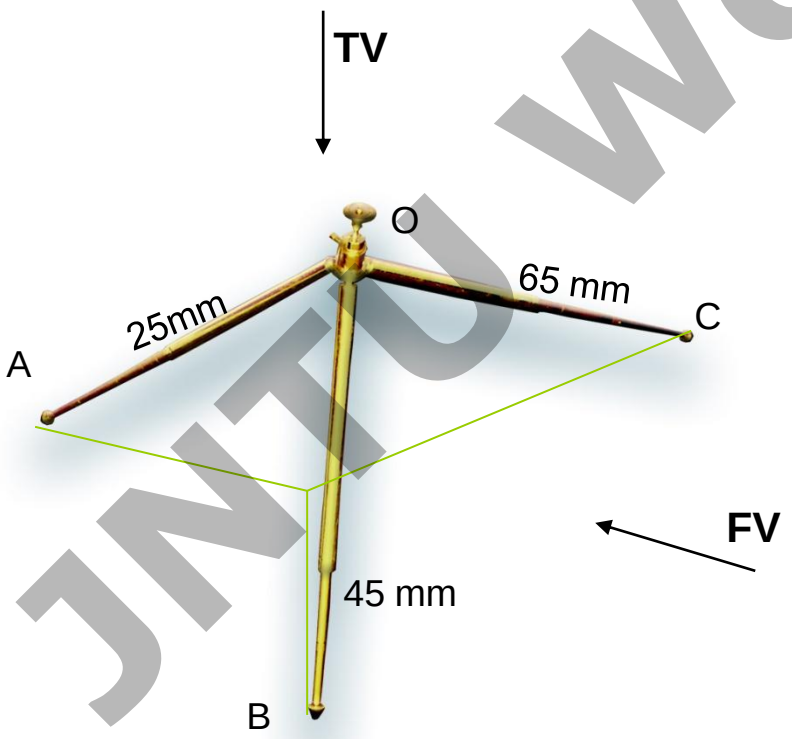

All JNTU World

PROBLEM 17:- A pipe line from point **A** has a downward gradient 1:5 and it runs due Eas
Another Point B is 12 M from **A** and due East of **A** and in same level of **A.** Pipe line from
20^0 Due East of South and meets pipe line from **A** at point **C.**
Draw projections and find length of pipe line from B and it's inclination with ground.

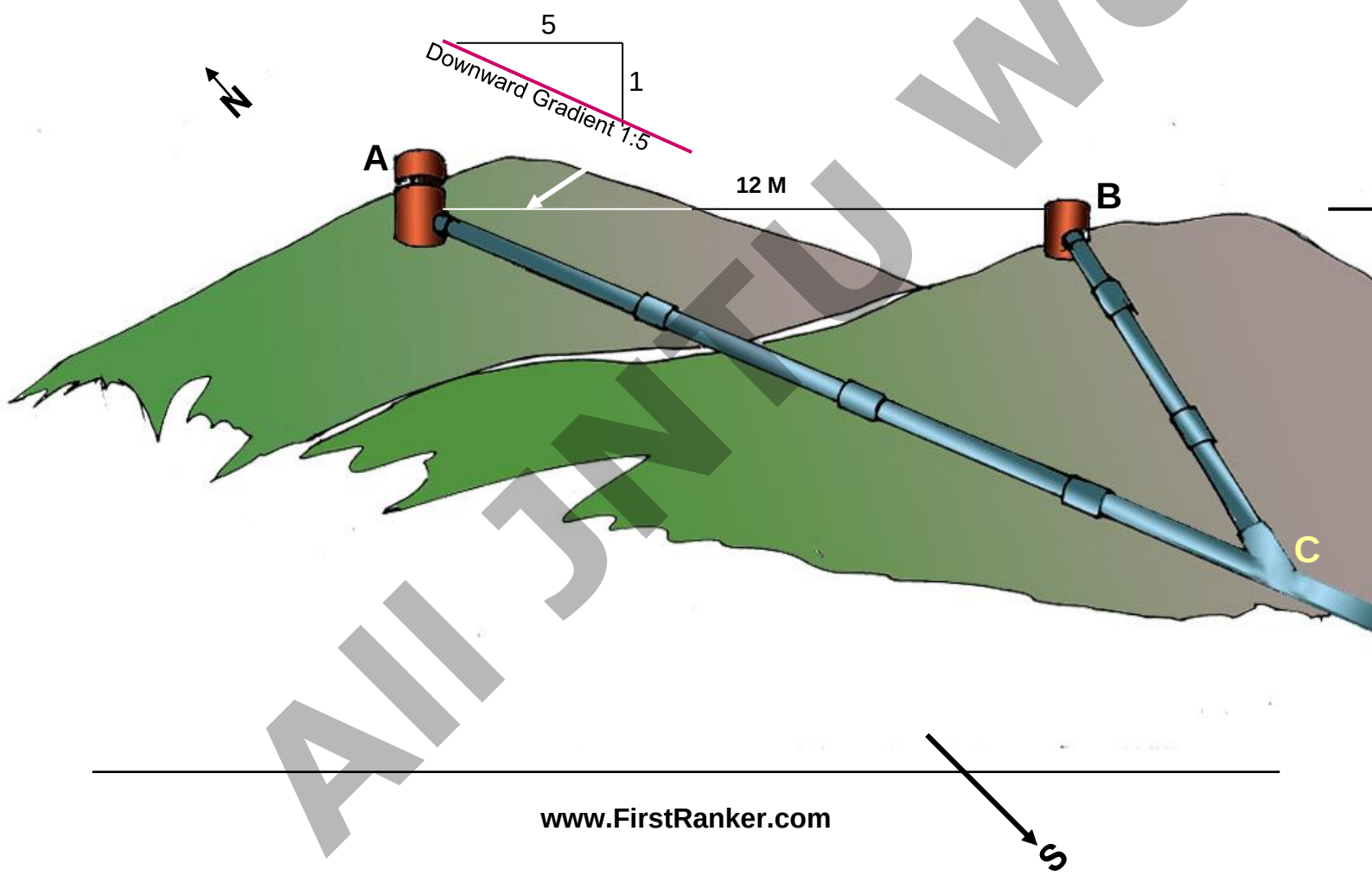

All JNTU World

PROBLEM 18: A person observes two objects, A & B, on the ground, from a tower, 15 M hi
At the angles of depression 30^0 & 45^0. Object A is is due North-West direction of observer a
object B is due West direction. Draw projections of situation and find distance of objects fro
observer and from tower also.

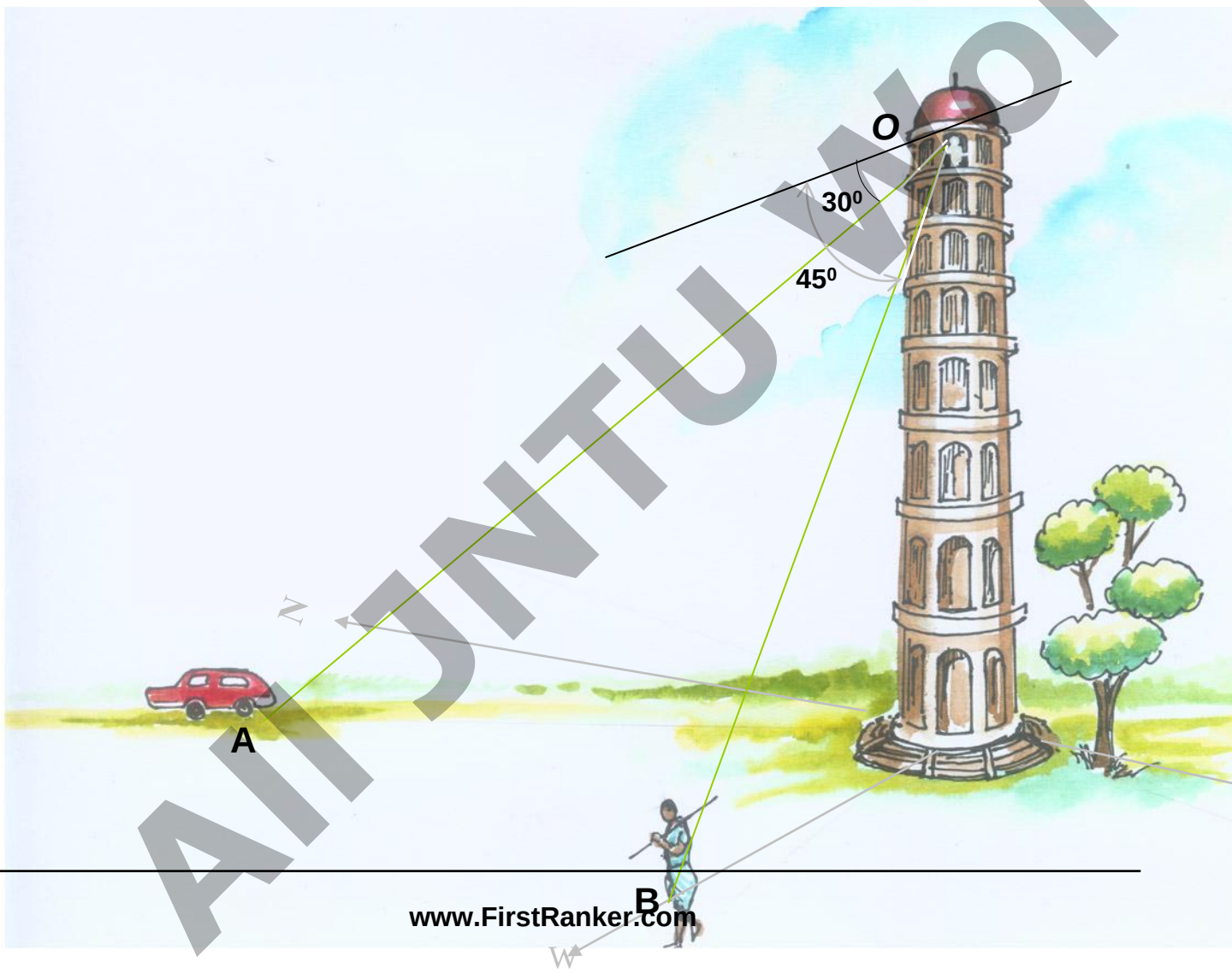

All JNTU World

FirstRanker.com
Firstranker's choice
www.FirstRanker.com www.FirstRanker.com

PROBLEM 19:-Guy ropes of two poles fixed at 4.5m and 7.5 m above ground, are attached to a corner of a building 15 M high, make 300 and 450 inclinations with ground respectively.The poles are 10 M apart. Determine by drawing their projections,Length of each rope and distance of poles from building.

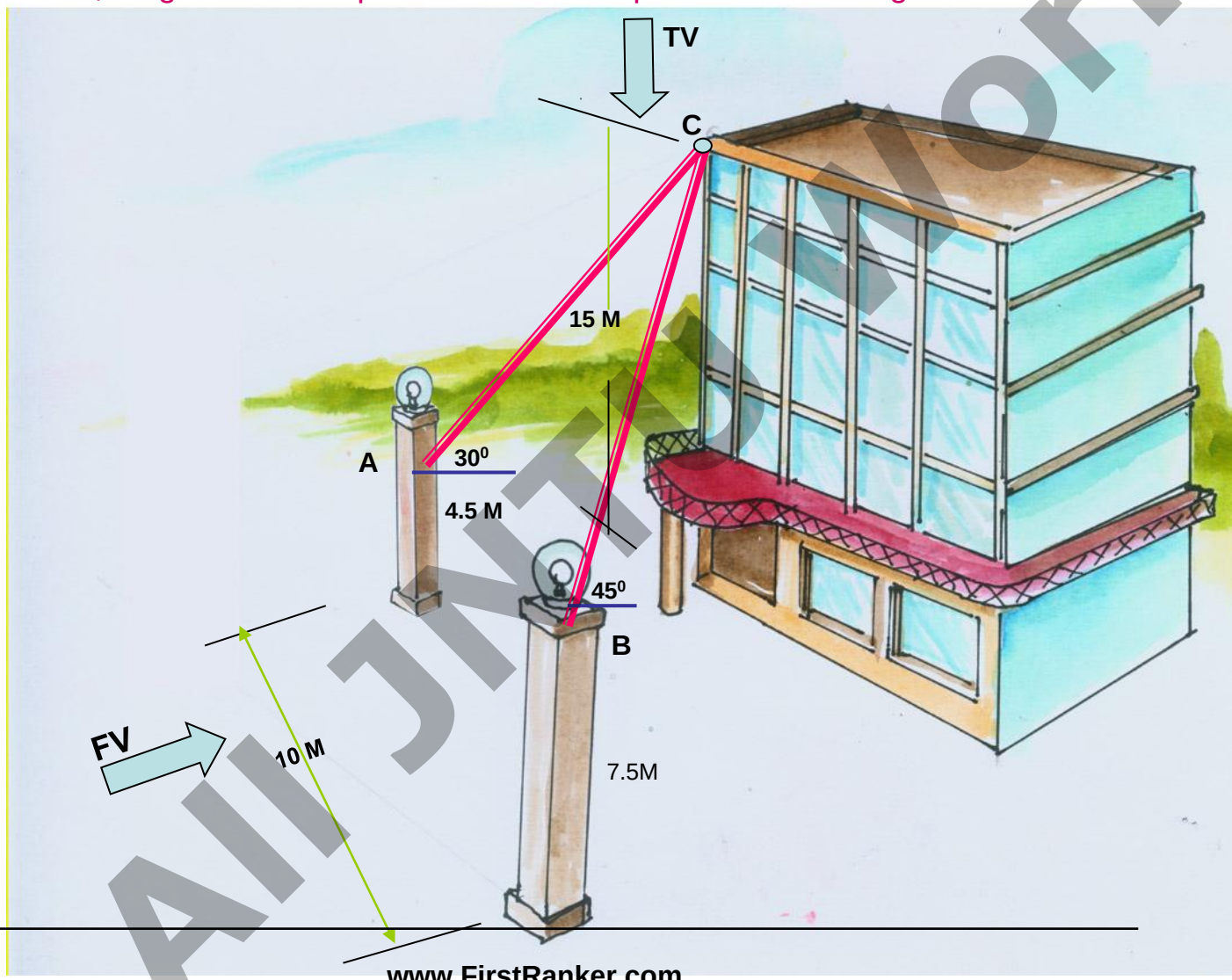

All JNTU World
www.FirstRanker.com

PROBLEM 20:- A tank of 4 M height is to be strengthened by four stay rods from each corne by fixing their other ends to the flooring, at a point 1.2 M and 0.7 M from two adjacent walls as shown. Determine graphically length and angle of each rod with flooring.

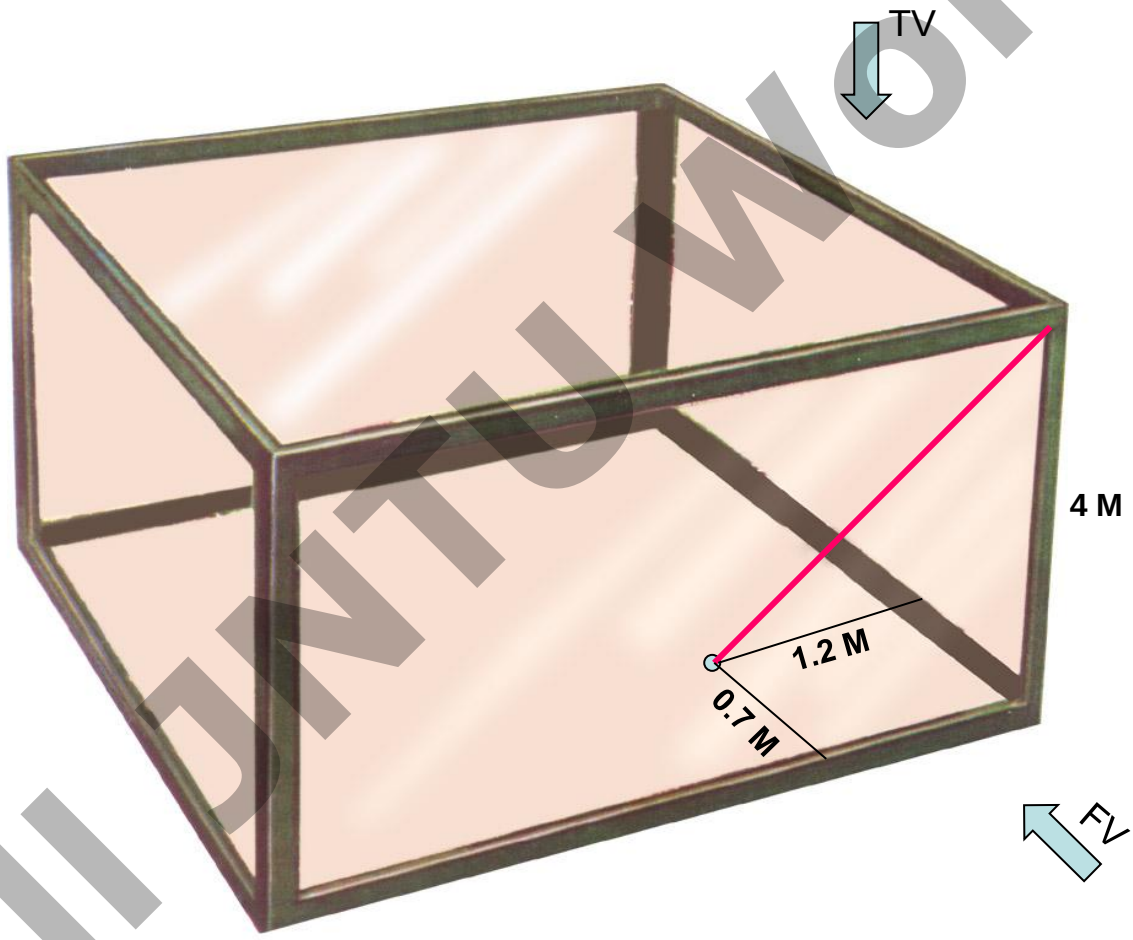

All JNTU World

FirstRanker.com
Firstranker's choice
www.FirstRanker.com www.FirstRanker.com

PROBLEM 21:- A horizontal wooden platform 2 M long and 1.5 M wide is supported by fo
from it's corners and chains are attached to a hook 5 M above the center of the platform.
Draw projections of the objects and determine length of each chain along with it's inclinat

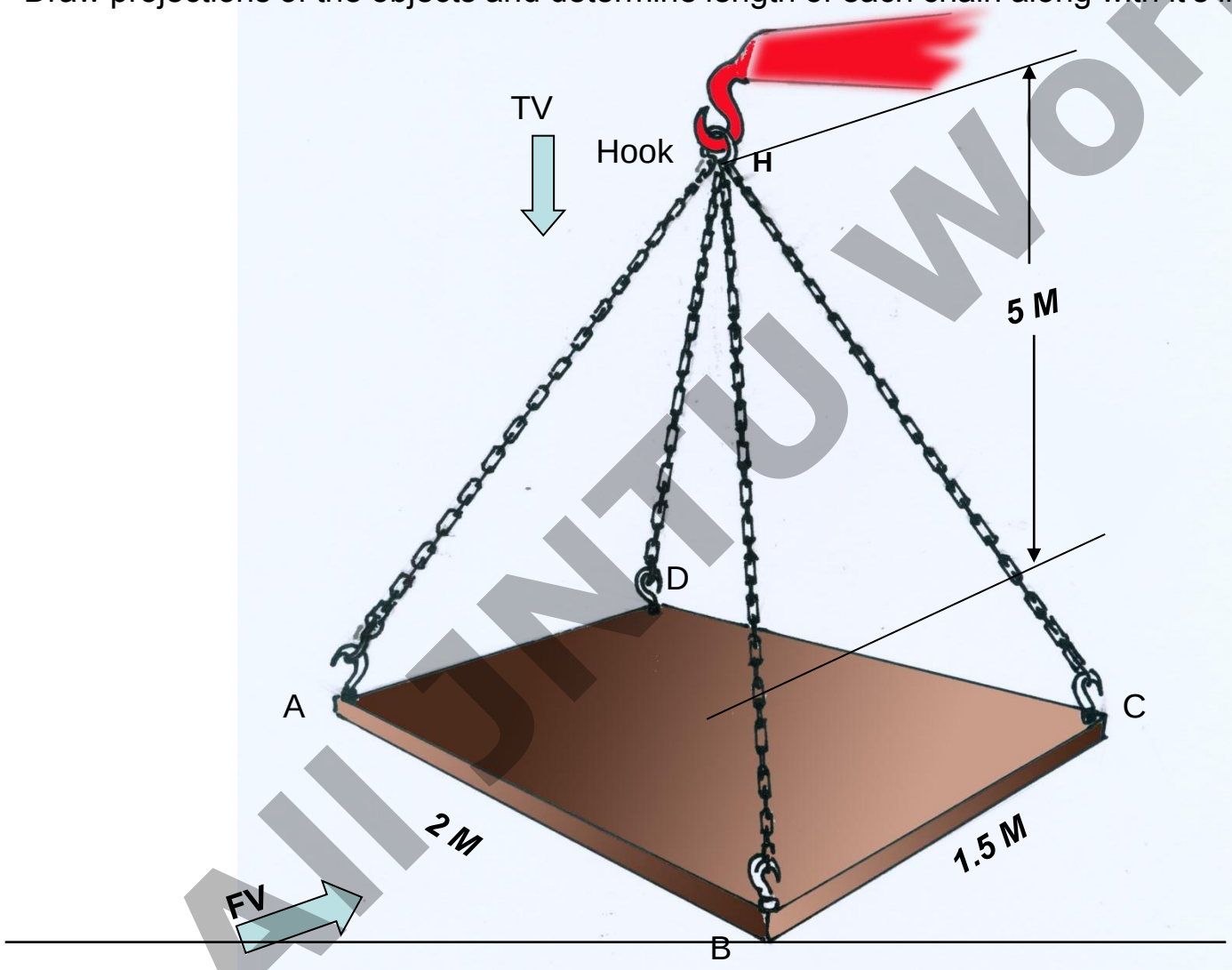

All JNTU World

www.FirstRanker.com

PROBLEM 22.

A room is of size 6.5m L ,5m D,3.5m high.
An electric bulb hangs 1m below the center of ceiling.
A switch is placed in one of the corners of the room, 1.5m above the flooring.
Draw the projections an determine real distance between the bulb and switch

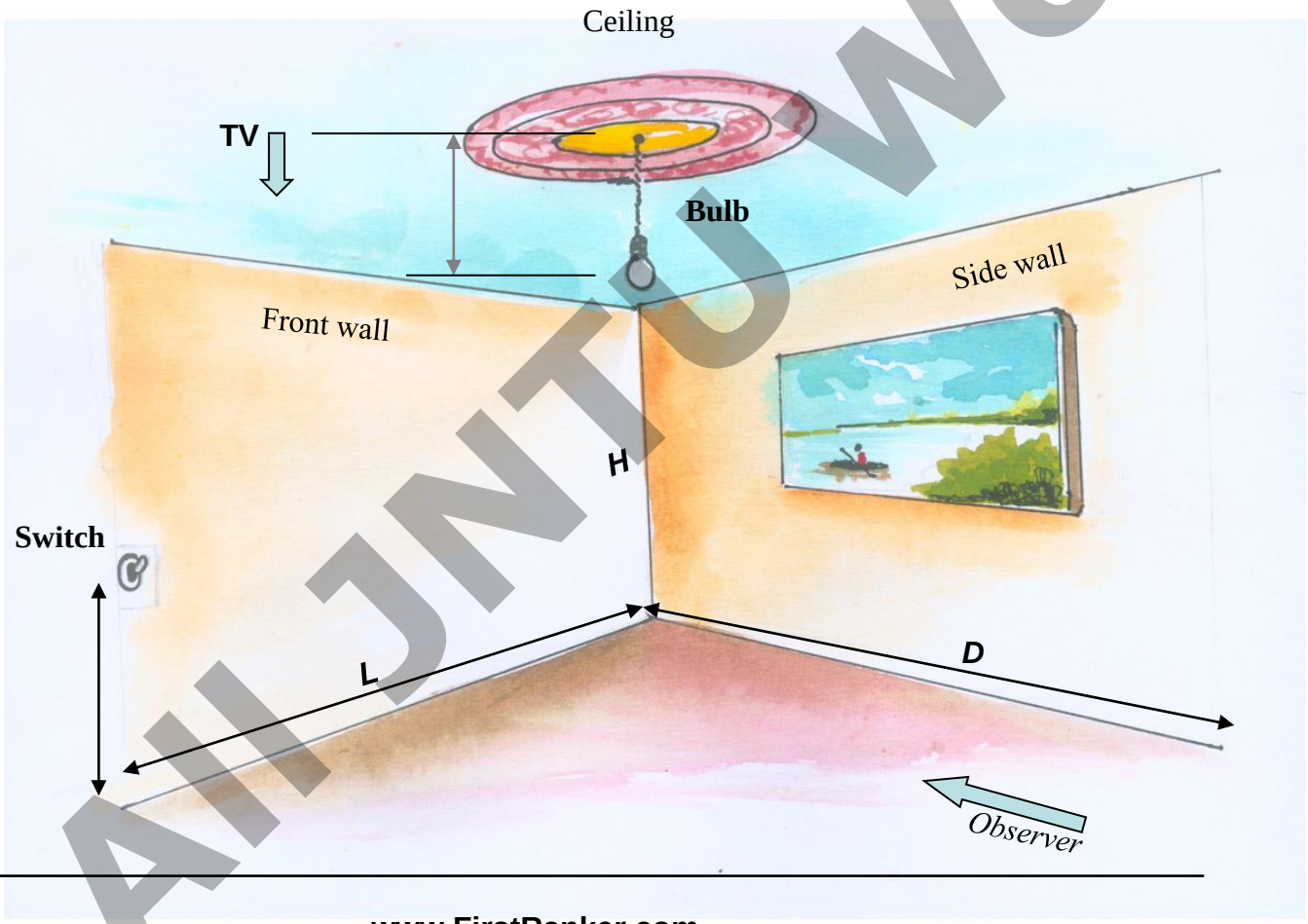

All JNTU World

PROBLEM 23:-

A PICTURE FRAME 2 M WIDE AND 1 M TALL IS RESTING ON HORIZONTAL WALL RAILING MAKES 35^0 INCLINATION WITH WALL. IT IS ATTAACHED TO A HOOK IN THE WALL BY TWO STRINGS THE HOOK IS 1.5 M ABOVE WALL RAILING. DETERMINE LENGTH OF EACH CHAIN AND TRUE ANGLE

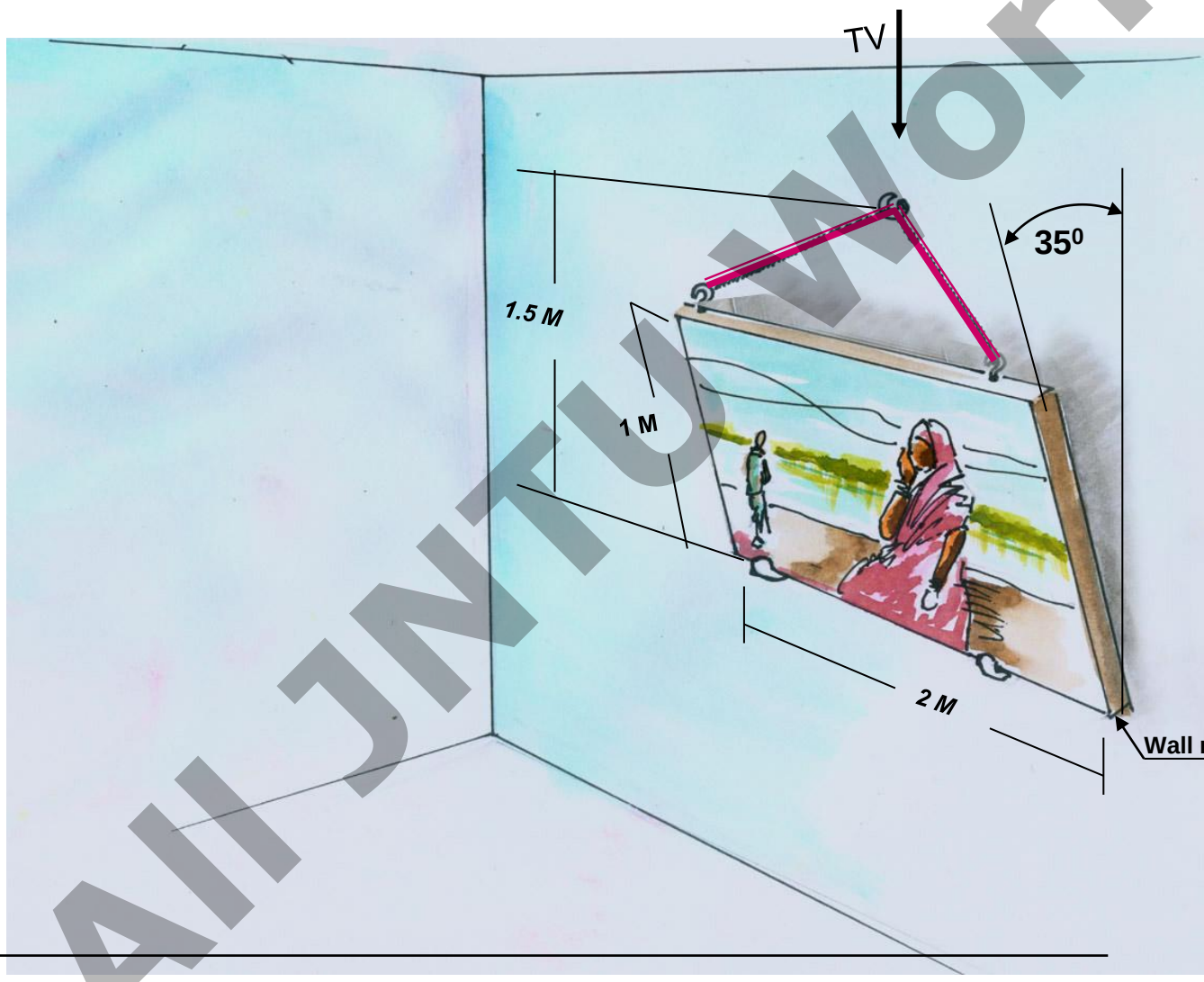

All JNTU World

FirstRanker.com
Firstranker's choice

SOME CASES OF THE LINE IN DIFFERENT QUADRANTS.

REMEMBER:
BELOW HP- Means- Fv below xy
BEHIND V p- Means- Tv above xy.

PROBLEM NO.24

T.V. of a 75 mm long Line CD, measures
End C is 15 mm below Hp and 50 mm in
End D is 15 mm in front of Vp and it is a
Draw projections of CD and find angles

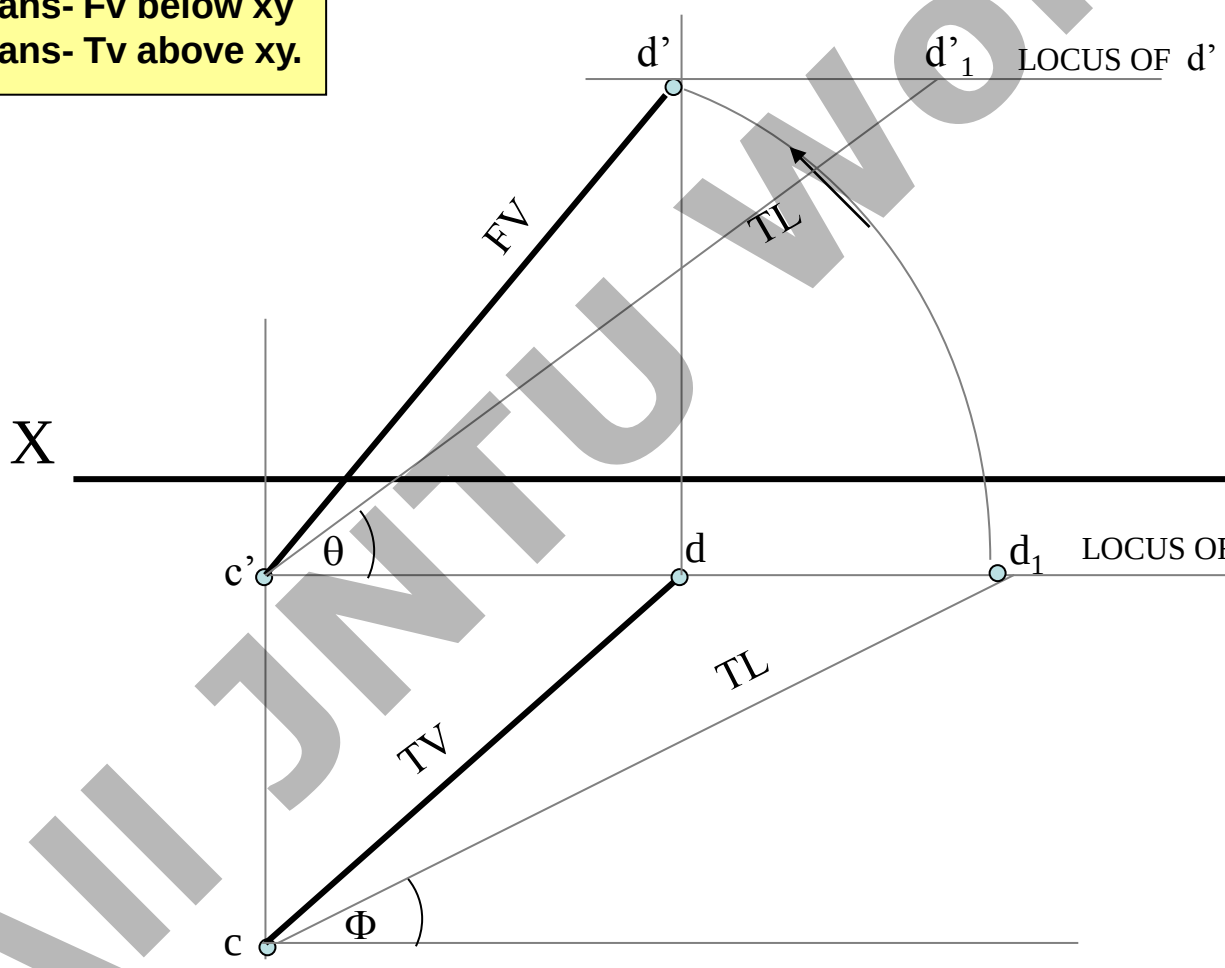

All JNTU World

PROBLEM NO.25

End A of line AB is in Hp and 25 mm behind Vp.
End B in Vp.and 50mm above Hp.
Distance between projectors is 70mm.
Draw projections and find it's inclinations with Ht, Vt.

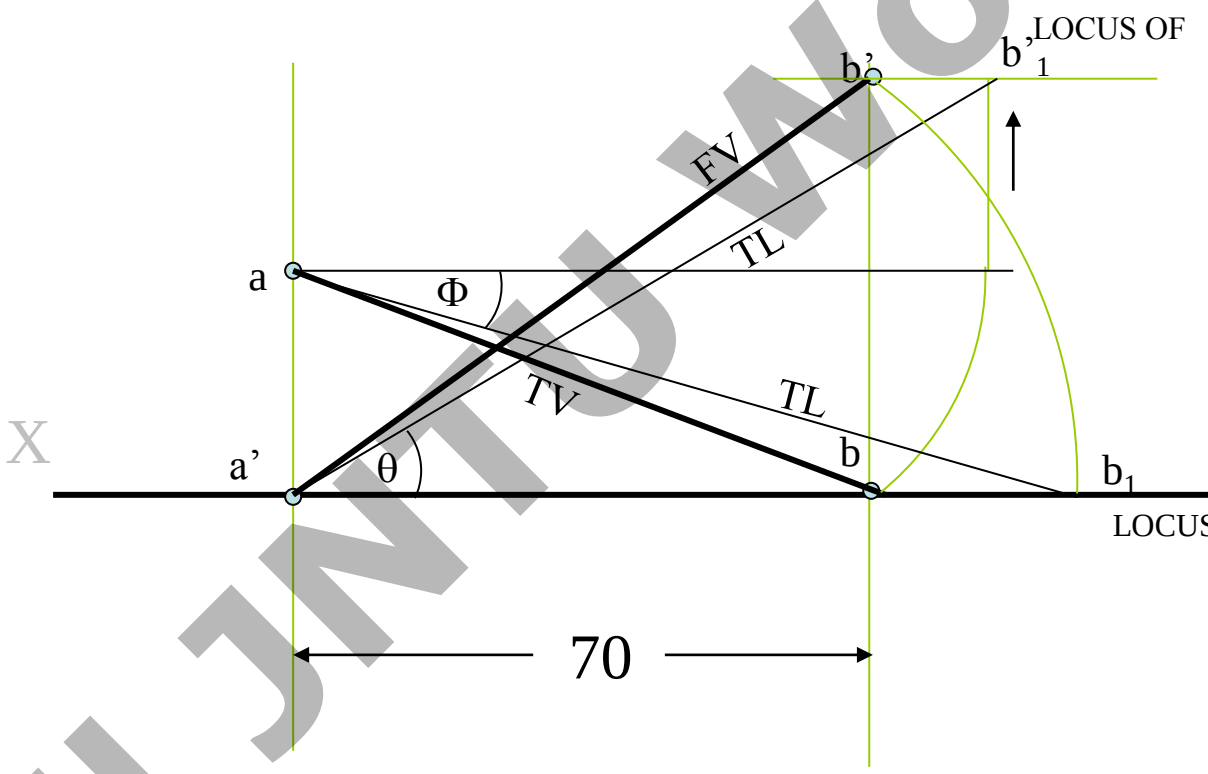

All JNTU World

PROBLEM NO.26

End A of a line AB is 25mm below Hp and 35mm behind Vp.
Line is 300 inclined to Hp.
There is a point P on AB contained by both HP & VP.
Draw projections, find inclination with Vp and traces.

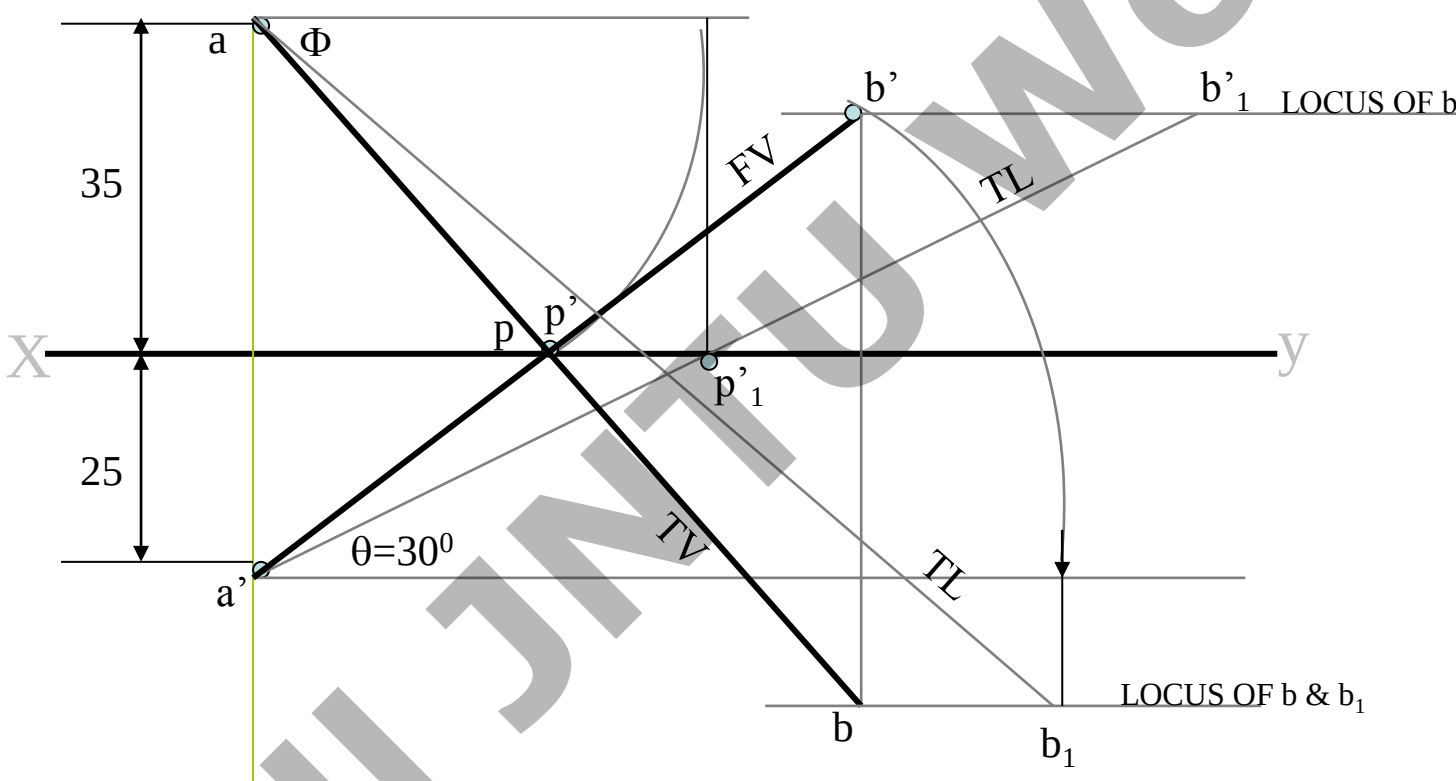

All JNTU World

PROBLEM NO.27

End A of a line AB is 25mm above Hp and end B is 55mm behind Vp.
The distance between end projectors is 75mm.
If both it's HT & VT coincide on xy in a point,
35mm from projector of A and within two projectors,
Draw projections, find TL and angles and HT, VT.

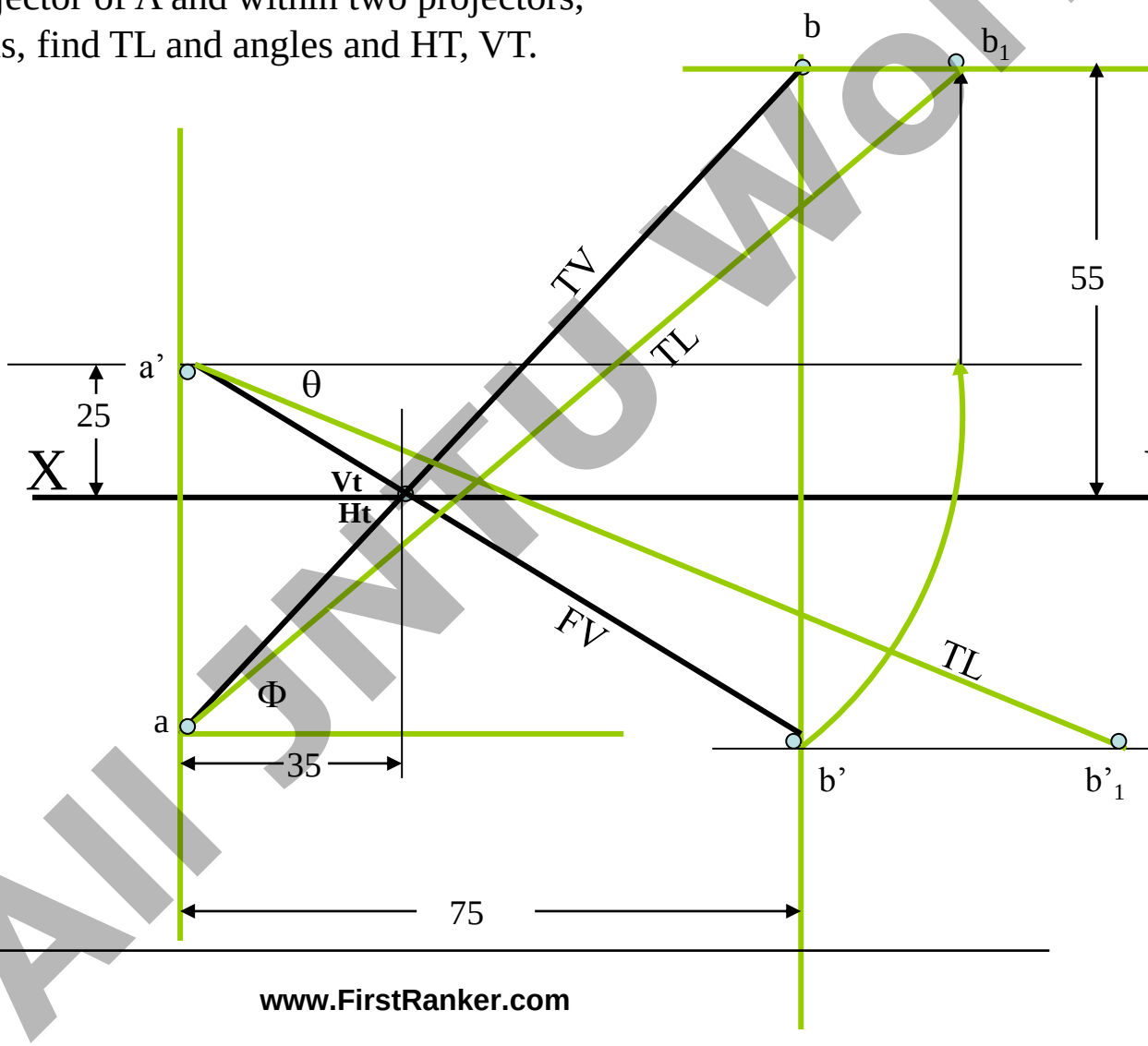

All JNTU World

FirstRanker.com
Firstranker's choice
www.FirstRanker.com www.FirstRanker.com

PROJECTIONS OF PLANES

In this topic various plane figures are the object

What is usually asked in the problem?

To draw their projections means F.V, T.V

What will be given in the problem?

1. Description of the plane figure.
2. It's position with HP and VP.

In which manner it's position with HP & VP will be des

Upto 16th sheet

1. **Inclination of it's SURFACE with one of the reference planes**
2. Inclination of one of it's EDGES with other reference plane will

(Hence this will be a case of an object inclined to both referen

Study the illustration showing surface & side inclination given on next page.

All JNTU World

www.FirstRanker.com

FirstRanker.com
Firstranker's choice
www.FirstRanker.com www.FirstRanker.com

CASE OF A RECTANGLE – OBSERVE AND NOTE ALL STEPS.

SURFACE **PARALLEL** TO HP
PICTORIAL PRESENTATION

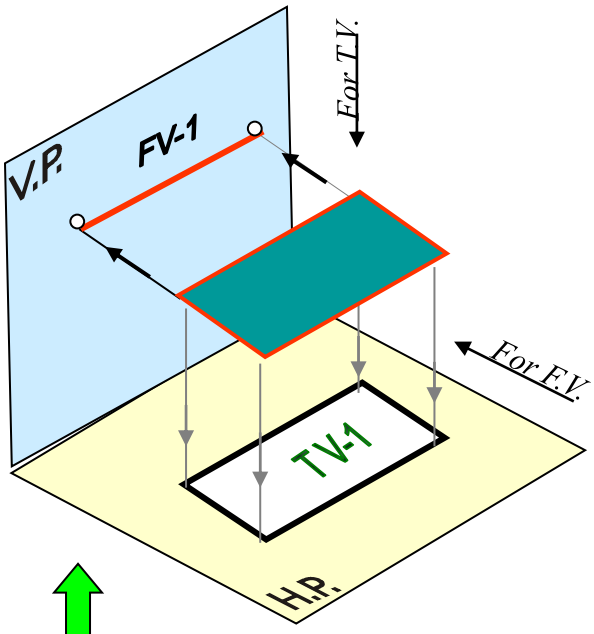

ORTHOGRAPHIC
TV-True Shape
FV- Line // to xy

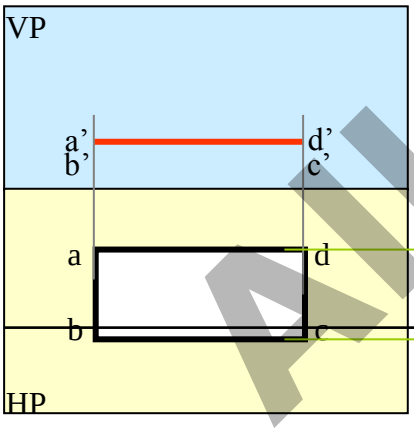

A

SURFACE **INCLINED** TO HP
PICTORIAL PRESENTATION

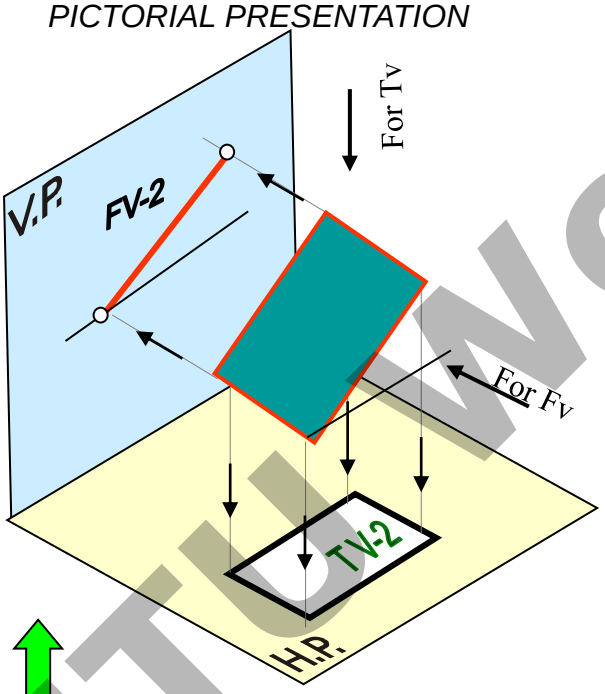

ORTHOGRAPHIC
FV- Inclined to XY
TV- Reduced Shape

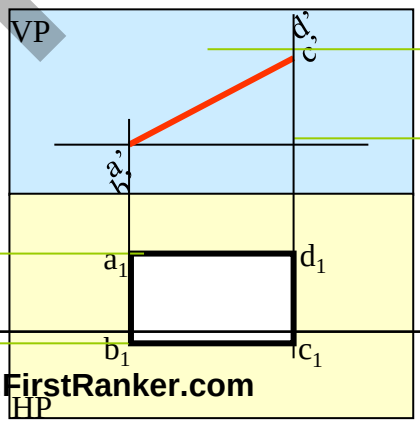

B

ONE SMALL SIDE
PICTORIAL PRE

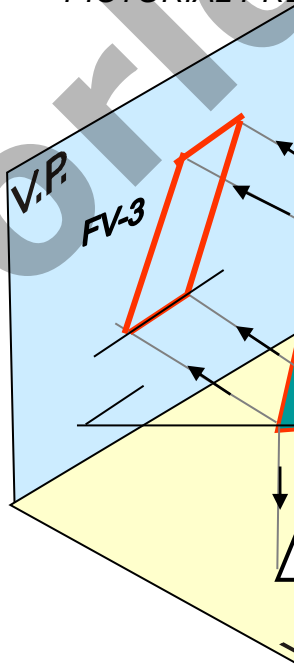

ORTHOGRA
FV- Apparent
TV-Previous S

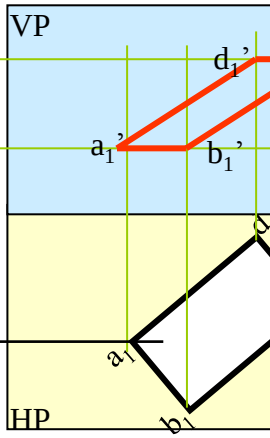

www.FirstRanker.com
All JNTU World

FirstRanker.com
Firstranker's choice
www.FirstRanker.com www.FirstRanker.com

PROCEDURE OF SOLVING THE PROBLEM:

IN THREE STEPS EACH PROBLEM CAN BE SOLVED:(As Shown In Previous

STEP 1. Assume suitable conditions & draw Fv & Tv of initial position

STEP 2. Now consider surface inclination & draw 2nd Fv & Tv.

STEP 3. After this,consider side/edge inclination and draw 3rd (final)

ASSUMPTIONS FOR INITIAL POSITION:

(Initial Position means assuming surface // to HP or VP)

1.If in problem surface is inclined to HP – assume it // HP

Or If surface is inclined to VP – assume it // to VP

2. Now if surface is assumed // to HP- It's TV will show True Shape.

And If surface is assumed // to VP – It's FV will show True Shape.

3. Hence begin with drawing TV or FV as True Shape.

4. While drawing this True Shape –

keep one side/edge (which is making inclination) perpendicular to

(similar to pair no. A on previous page illustration).

Now Complete STEP 2. By making surface inclined to the resp plane & projec

(Ref. 2nd pair B on previous page illustration)

Now Complete STEP 3. By making side inclined to the resp plane & project

(Ref. 3nd pair C on previous page illustration)

APPLY SAME STEPS TO SOLVE NEXT *ELEVEN* PRO

www.FirstRanker.com
All JNTU World

Q12.4: A regular pentagon of 25mm side has one side on the ground. Its plane
45º to the HP and perpendicular to the VP. Draw its projections and show its t

Hint: As the plane is inclined to HP, it should be kept parallel to HP with one edge perpendicular to VP

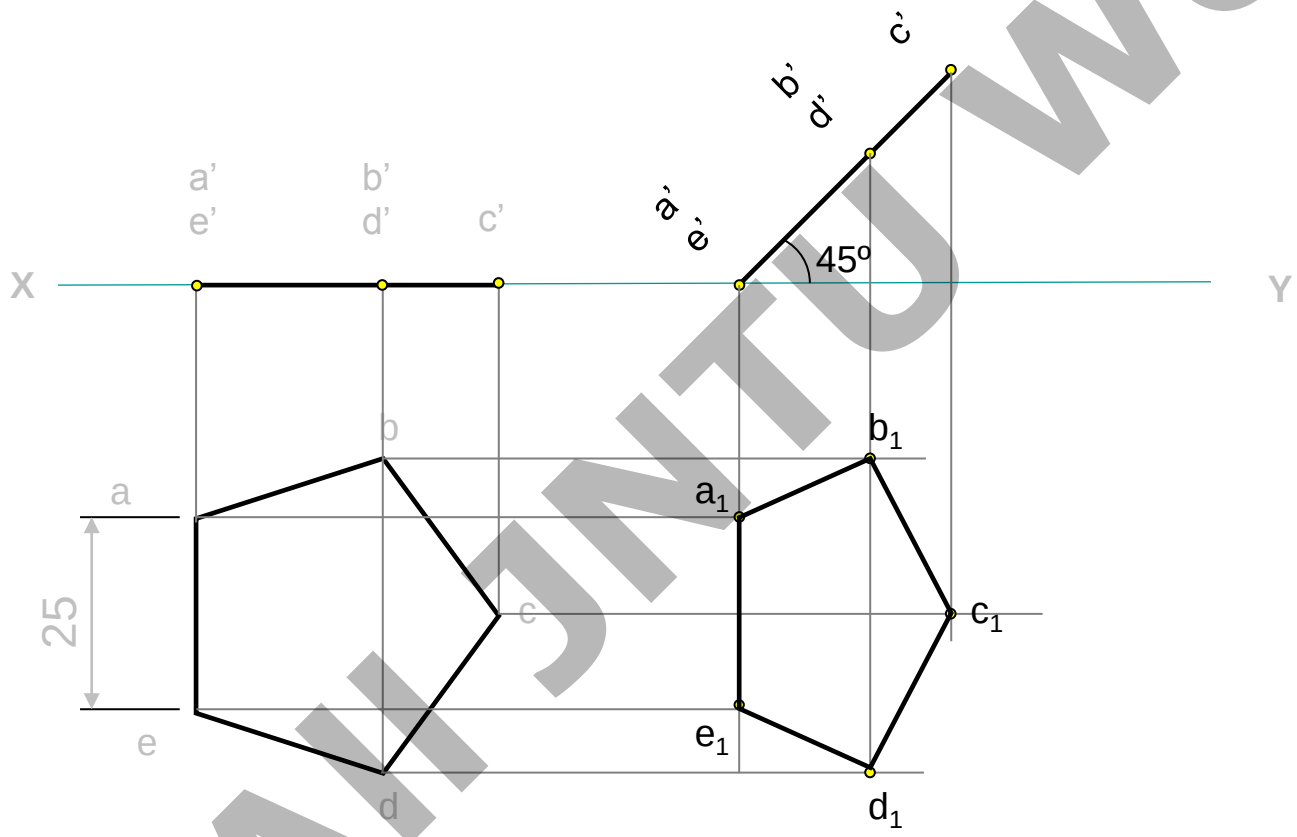

All JNTU World

Q.12.5:Draw the projections of a circle of 5 cm diameter having its plane verti inclined at 30º to the V.P. Its centre is 3cm above the H.P. and 2cm in front of t also its traces

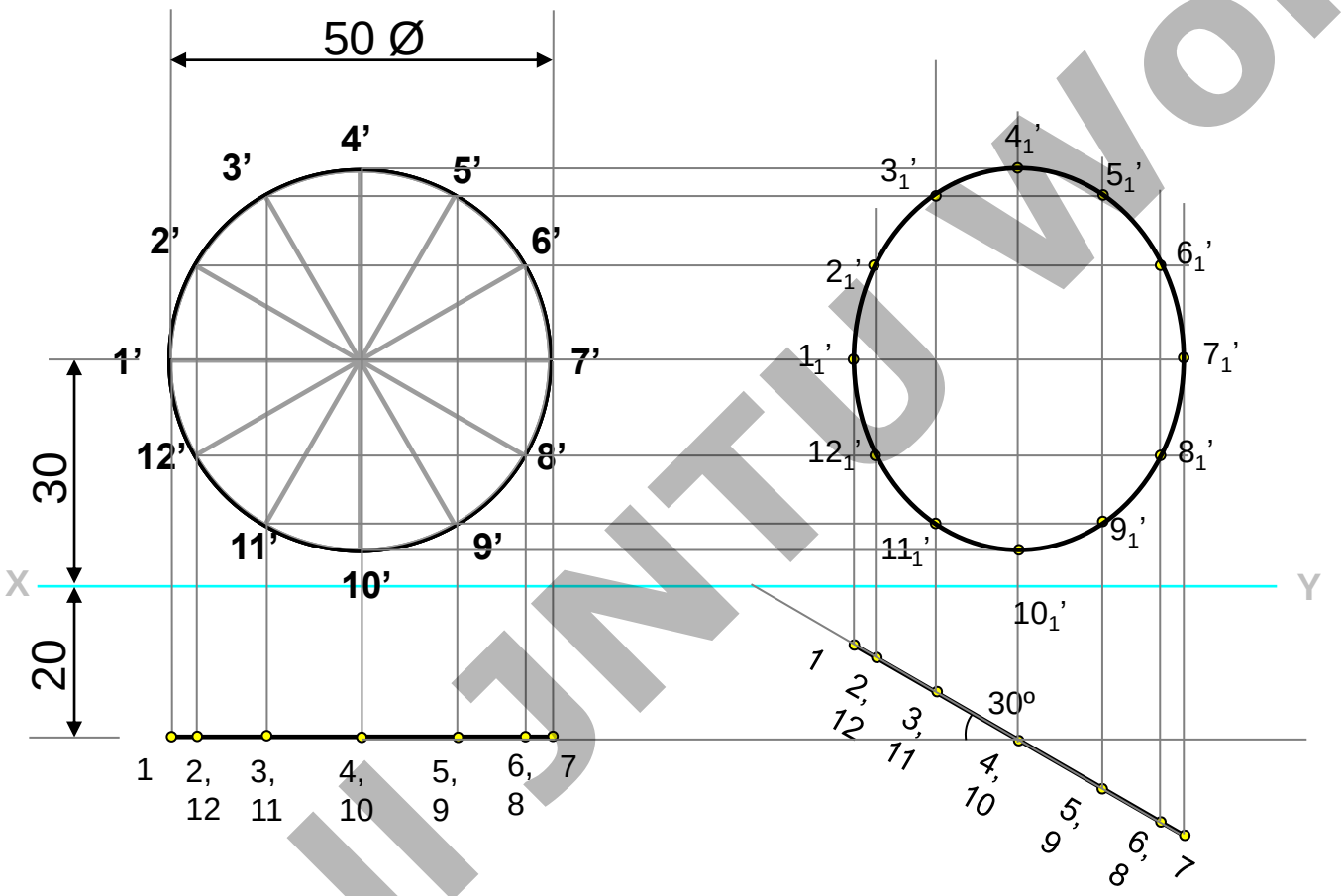

All JNTU World

Problem 5 : draw a regular hexagon of 40 mm sides, with its two sides vertical. D of 40 mm diameter in its centre. The figure represents a hexagonal plate with a ho having its surfacre parallel to the VP. Draw its projections when the surface is ver inclined at 30º to the VP.

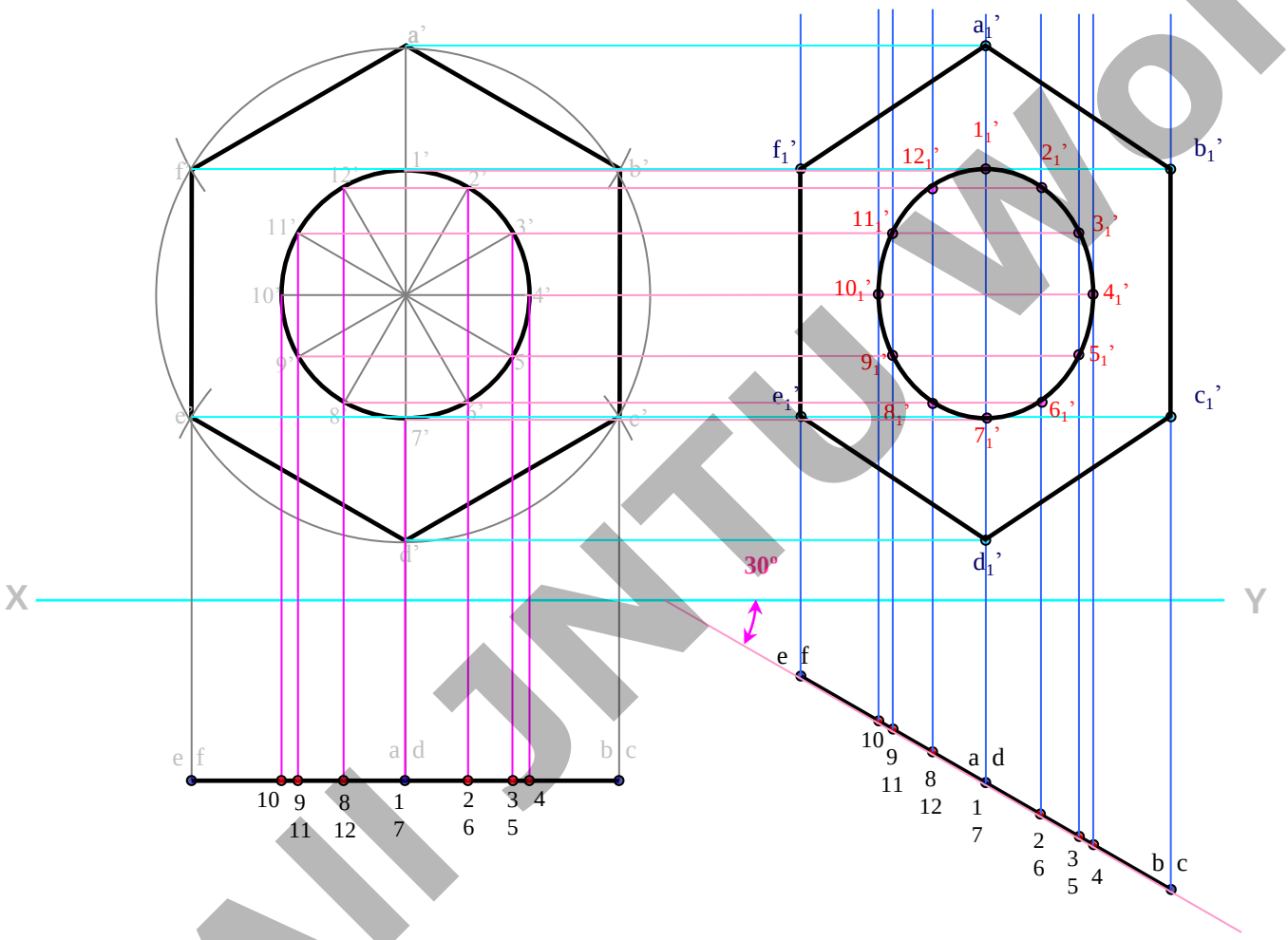

All JNTU World

FirstRanker.com
Firstranker's choice
www.FirstRanker.com www.FirstRanker.com
All JNTU World
www.FirstRanker.com

Problem 1 : Draw an equilateral triangle of 75 mm sides and inscribe a circle in it projections of the figure, when its plane is vertical and inclined at 30º to the VP an sides of the triangle is inclined at 45º to the HP.

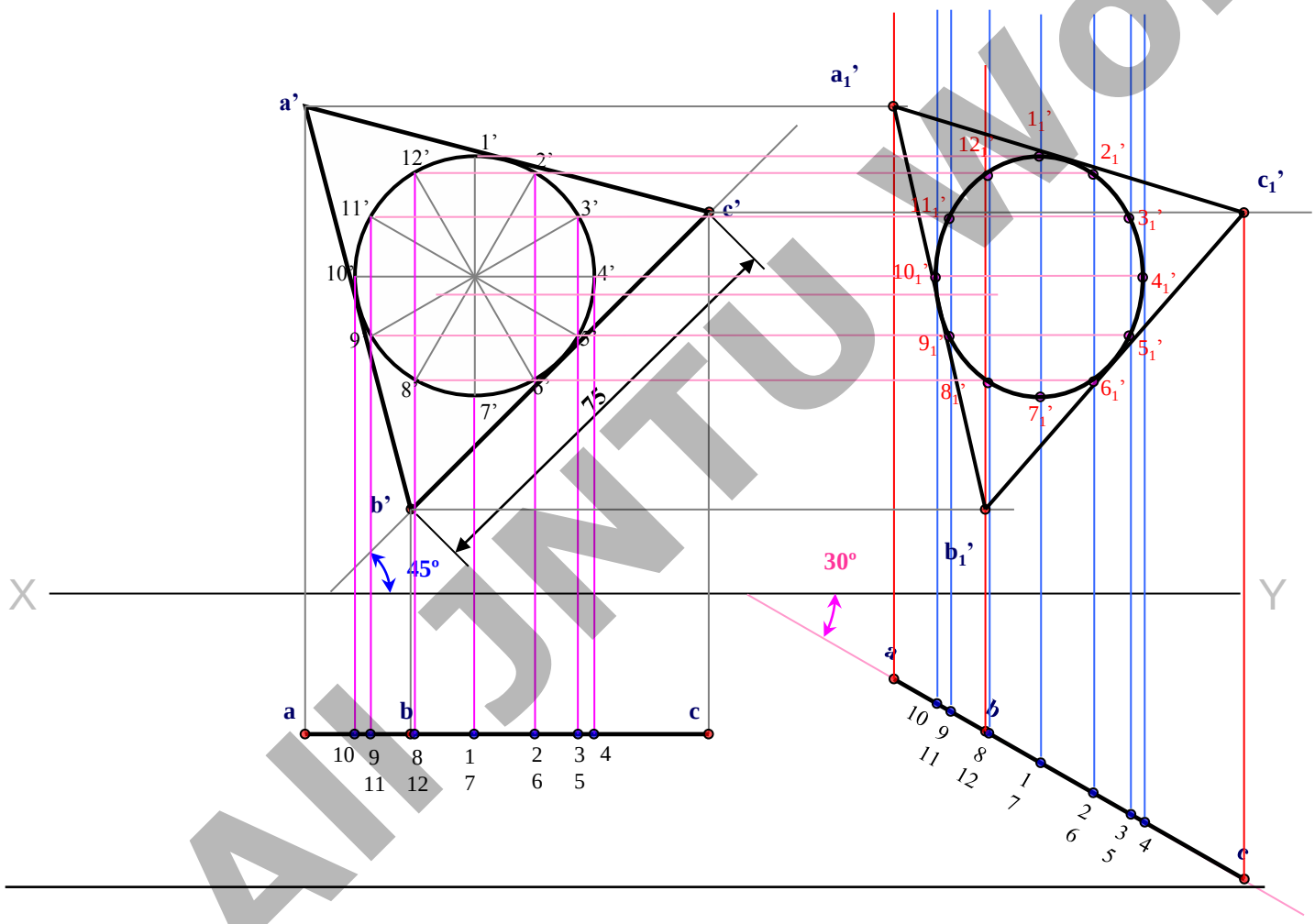

All JNTU World

Q12.7: Draw the projections of a regular hexagon of 25mm sides, having c side in the H.P. and inclined at 60 to the V.P. and its surface making an ang with the H.P.

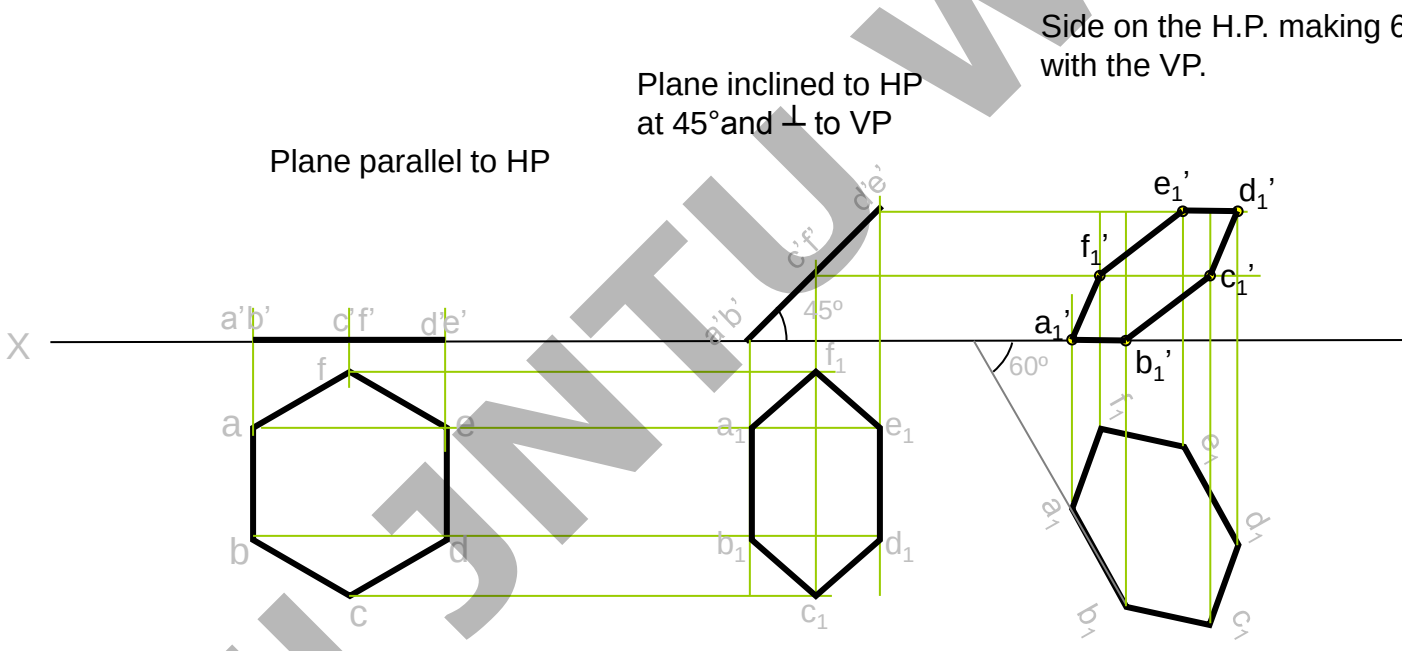

All JNTU World

Q12.6: A square ABCD of 50 mm side has its corner A in the H.P., its diagonal 30º to the H.P. and the diagonal BD inclined at 45º to the V.P. and parallel to th projections.

Keep AC parallel to the H.P. & BD perpendicular to V.P. (considering inclination of AC as inclination of the plane)

Incline AC at 30º to the H.P. i.e. incline the edge view (FV) at 30º to the HP

Incline BD at 4

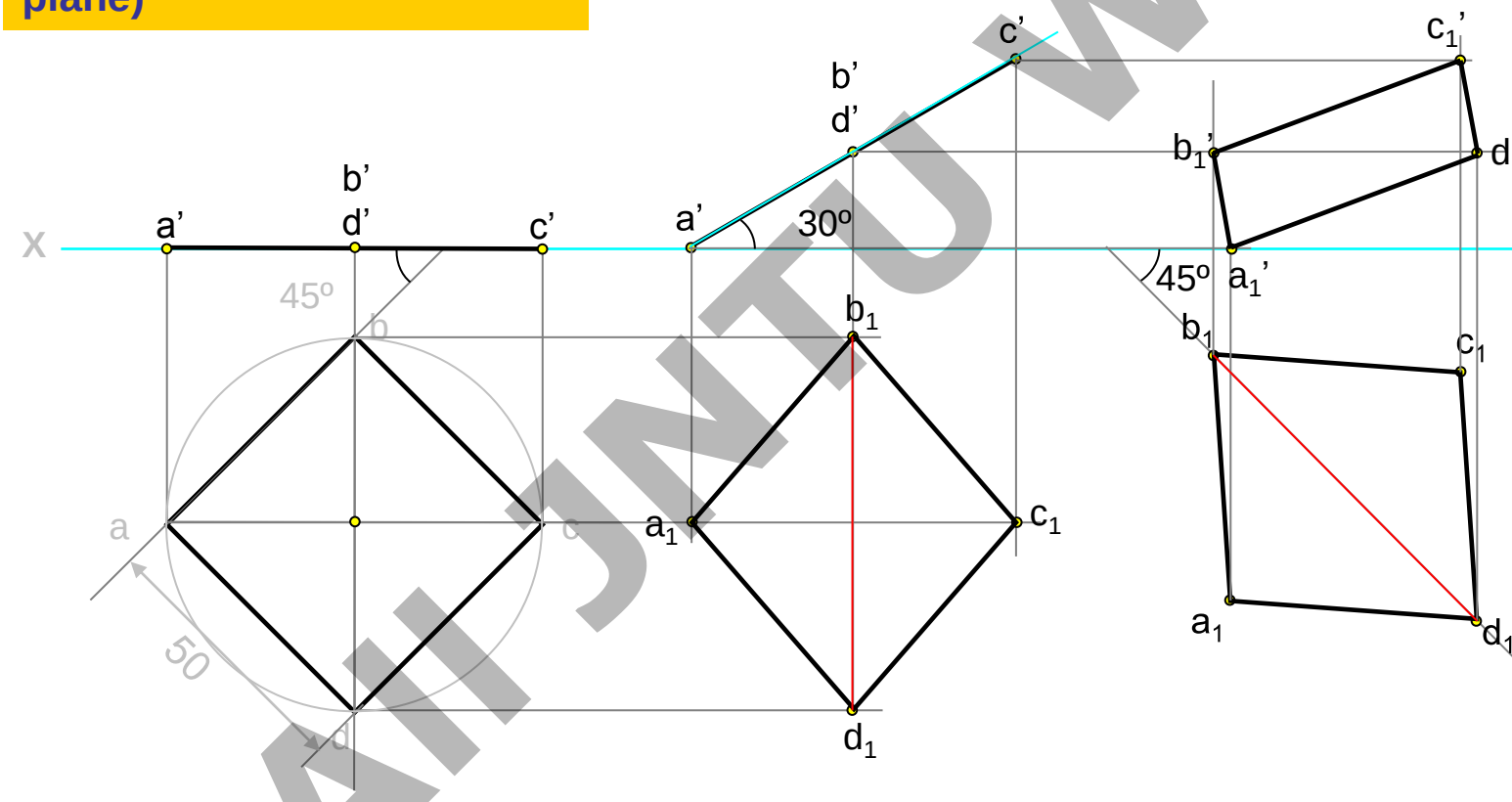

All JNTU World

FirstRanker.com
Firstranker's choice
www.FirstRanker.com www.FirstRanker.com

Q: Draw a rhombus of 100 mm and 60 mm long diagonals with longer diagonal horizo is the top view of a square having 100 mm long diagonals. Draw its front view.

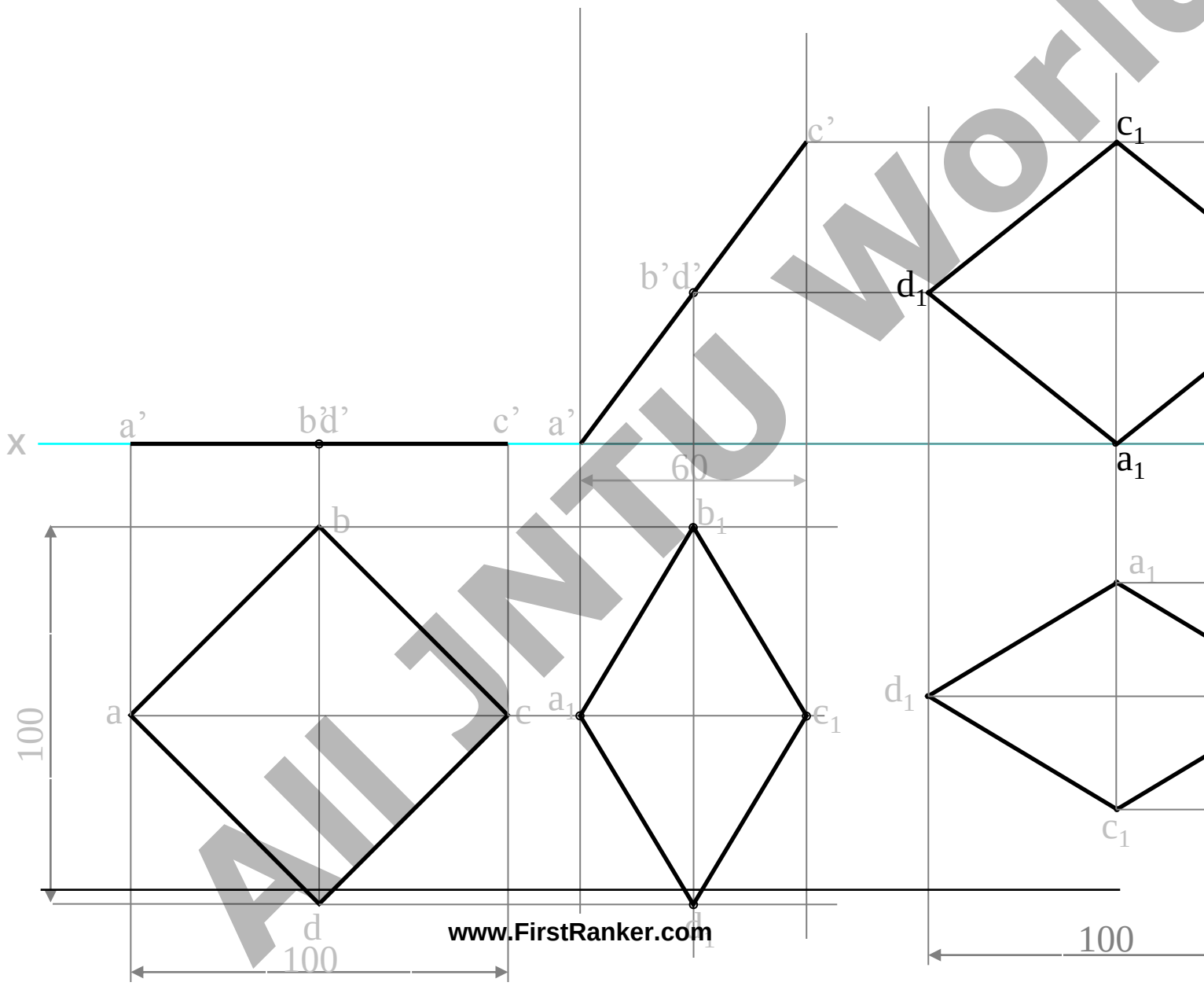

All JNTU World
www.FirstRanker.com

Q4: Draw projections of a rhombus having diagonals 125 mm and 50 mm long diagonal of which is parallel to both the principal planes, while the other is in the H.P.

Keep AC parallel to the H.P. & BD perpendicular to V.P. (considering inclination of AC as inclination of the plane and inclination of BD as inclination of edge)

Incline AC at 30º to the H.P.

Make BD para

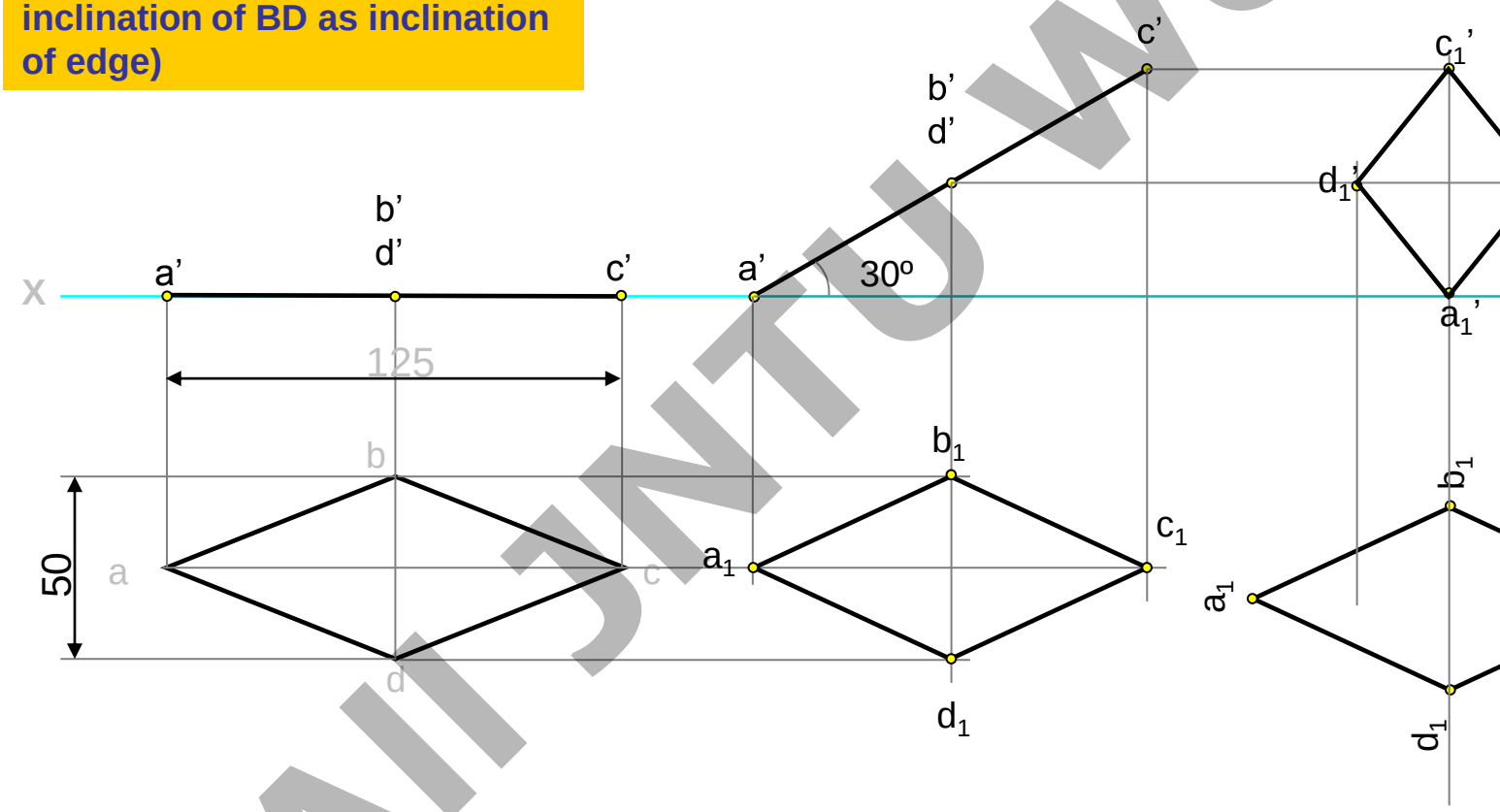

All JNTU World

Q 2:A regular hexagon of 40mm side has a corner in the HP. Its surface incli the HP and the top view of the diagonal through the corner which is in the H angle of 60° with the VP. Draw its projections.

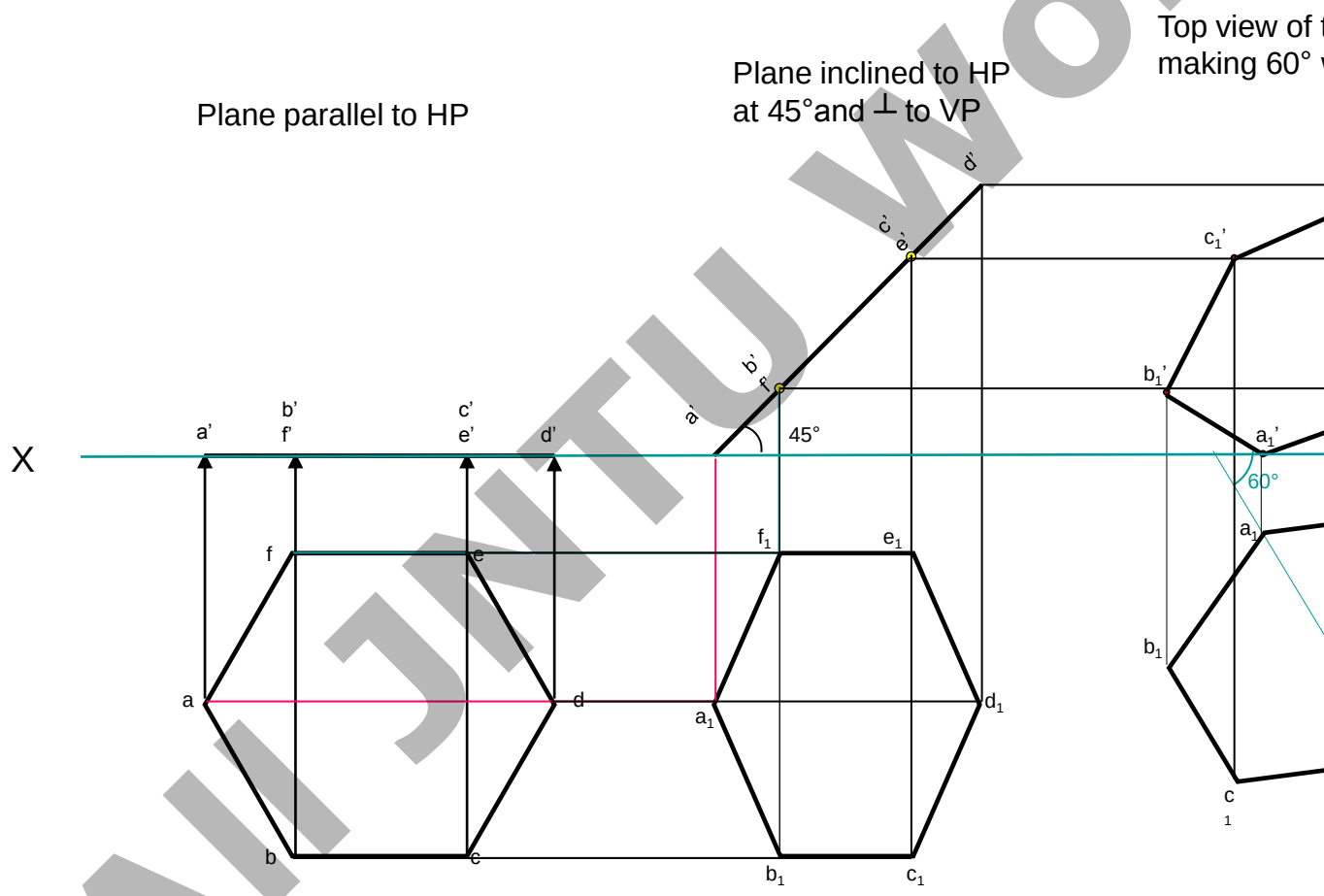

All JNTU World

Q7:A semicircular plate of 80mm diameter has its straight edge in the VP and
to HP.The surface of the plate makes an angle of 30 with the VP. Draw its proje

Plane in the V.P. with straight edge ⊥ to H.P

Plane inclined at 30° to the V.P. and straight edge in the H.P.

St.edge in V.P. and inclined at 45° to the H.

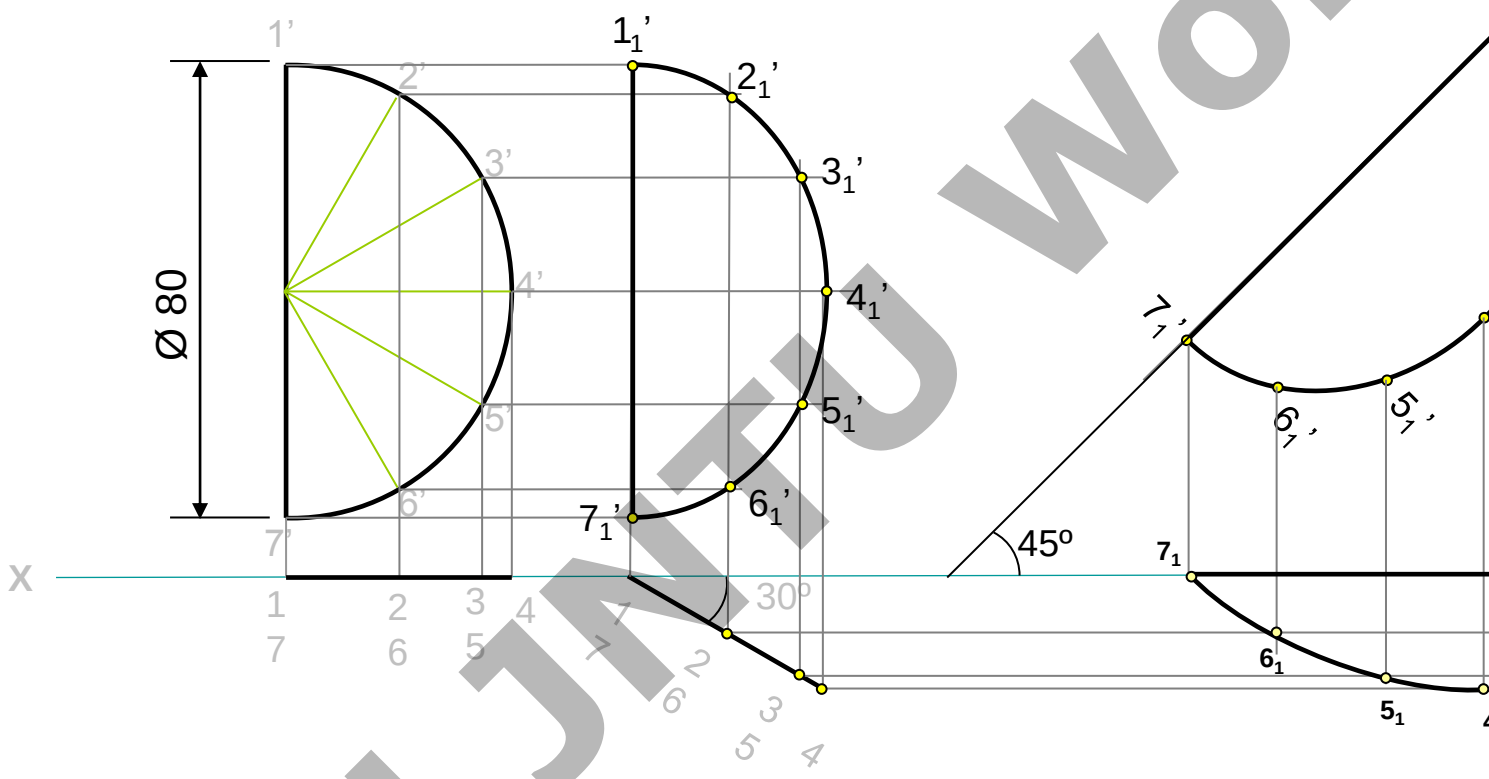

All JNTU World

FirstRanker.com
Firstranker's choice
www.FirstRanker.com www.FirstRanker.com

Problem 12.8 : Draw the projections of a circle of 50 mm diameter resting on the
on the circumference. Its plane inclined at 45º to the HP and (a) The top view of t
making 30º angle with the VP (b) The the diameter AB making 30º angle with the

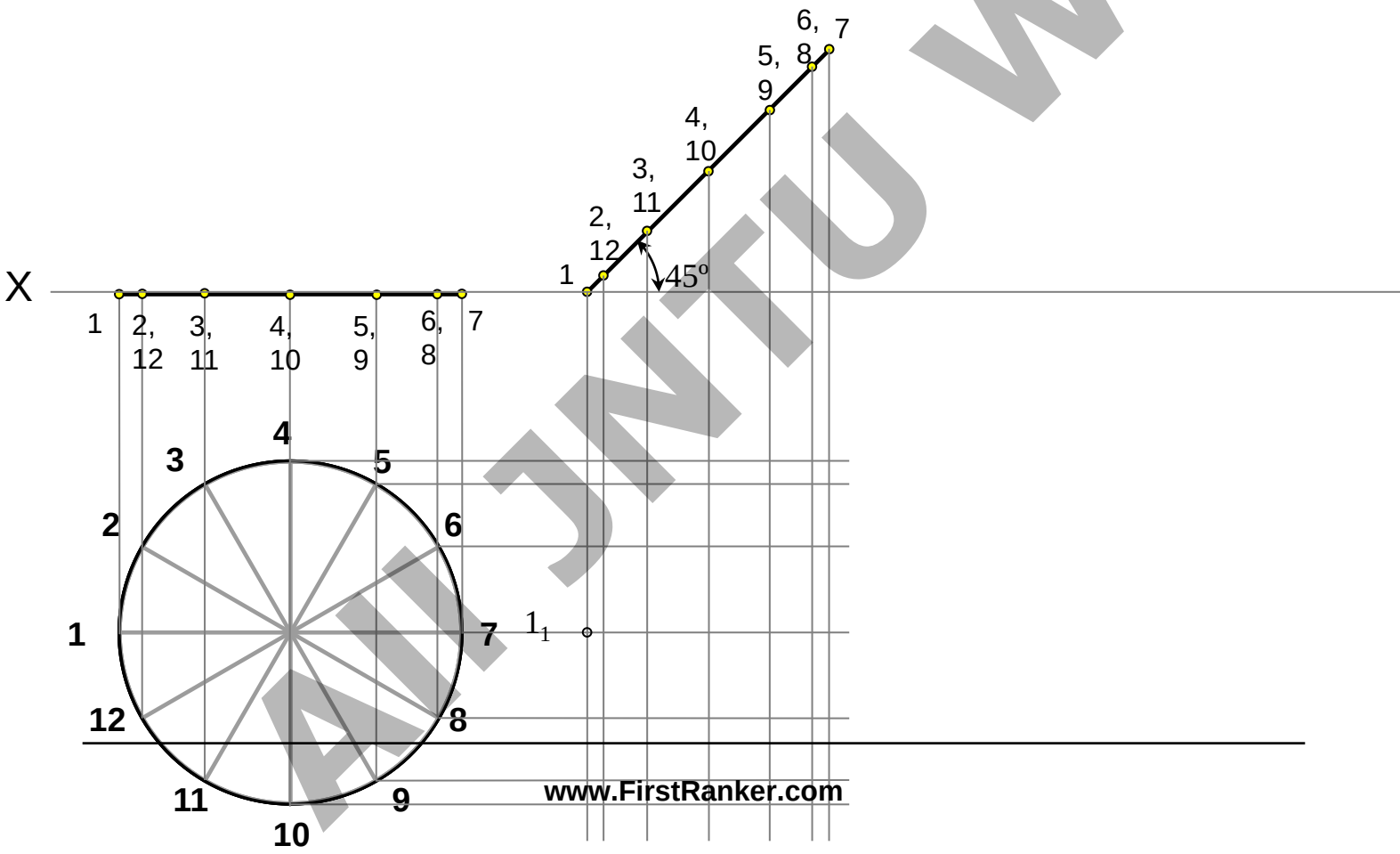

All JNTU World

Q12.10: A thin rectangular plate of sides 60 mm X 30 mm has its shorter side inclined at 30º to the H.P. Project its top view if its front view is a square of 30

A rectangle can be seen as a square in the F.V. only when its surface is inclined to VP. So for the first view keep the plane // to VP & shorter edge ⊥ to HP

F.V. (square) is drawn first

Incline $a_1'b_1'$ H.P.

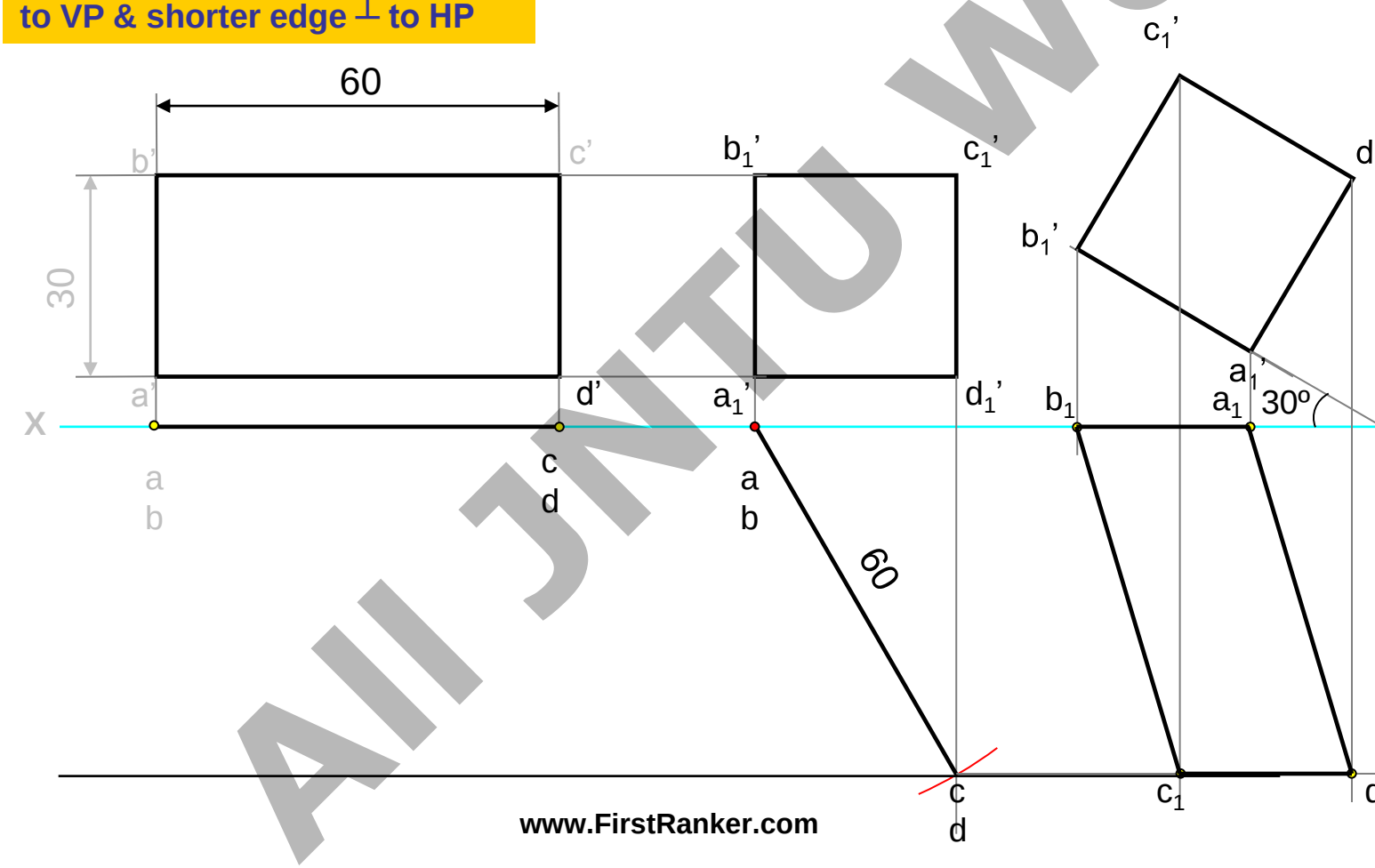

All JNTU World

Q12.11: A circular plate of negligible thickness and 50 mm diameter appears a the front view, having its major axis 50 mm long and minor axis 30 mm long. S view when the major axis of the ellipse is horizontal.

A circle can be seen as a ellipse in the F.V. only when its surface is inclined to VP. So for the first view keep the plane // to VP.

Incline the T.V. till the distance between the end projectors is 30 mm

Incline the F axis become

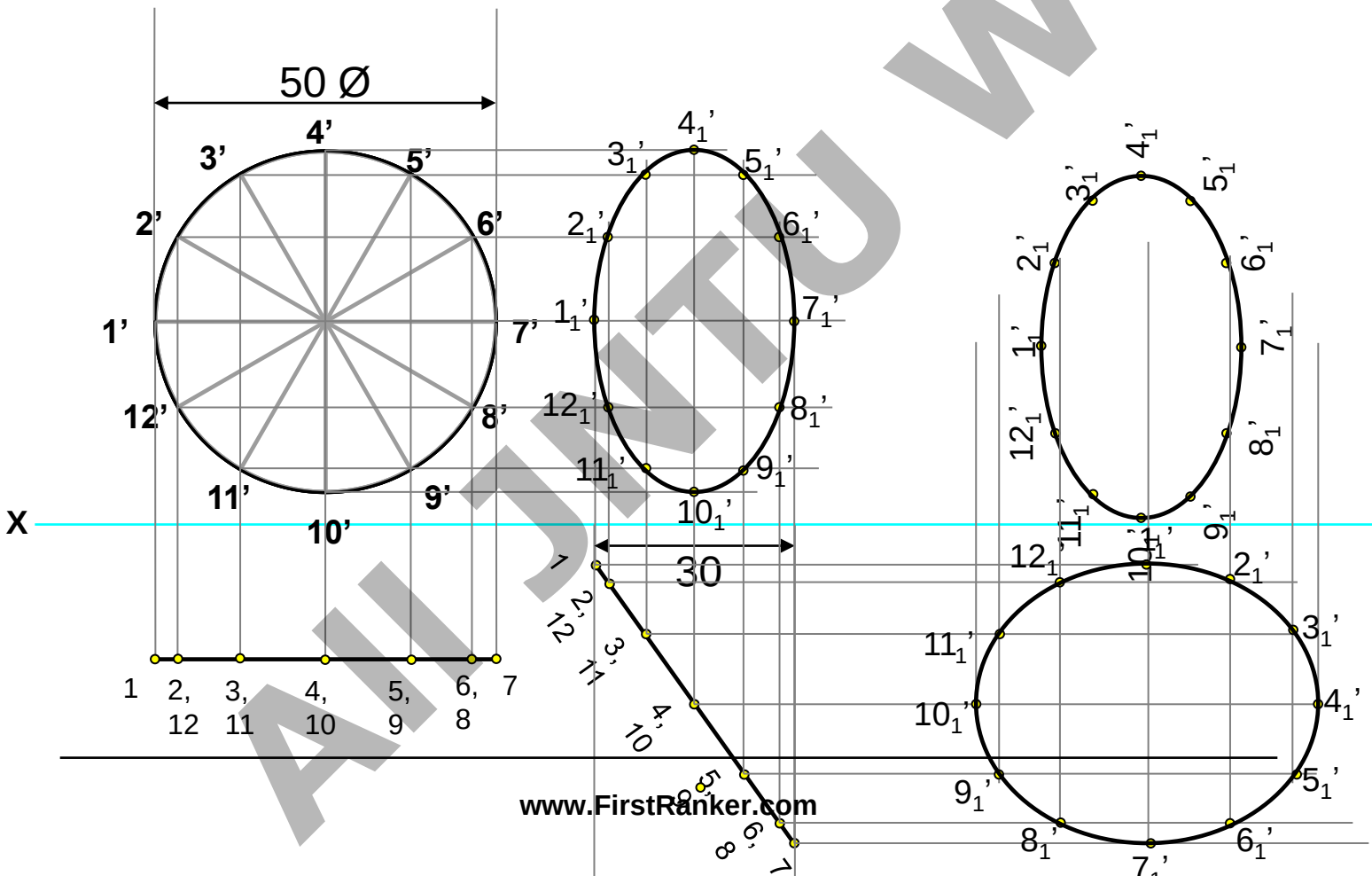

All JNTU World

FirstRanker.com
Firstranker's choice
www.FirstRanker.com www.FirstRanker.com

Problem 9 : A plate having shape of an isosceles triangle has base 50 mm altitude 70 mm. It is so placed that in the front view it is seen as an equilat 50 mm sides an done side inclined at 45° to xy. Draw its top view.

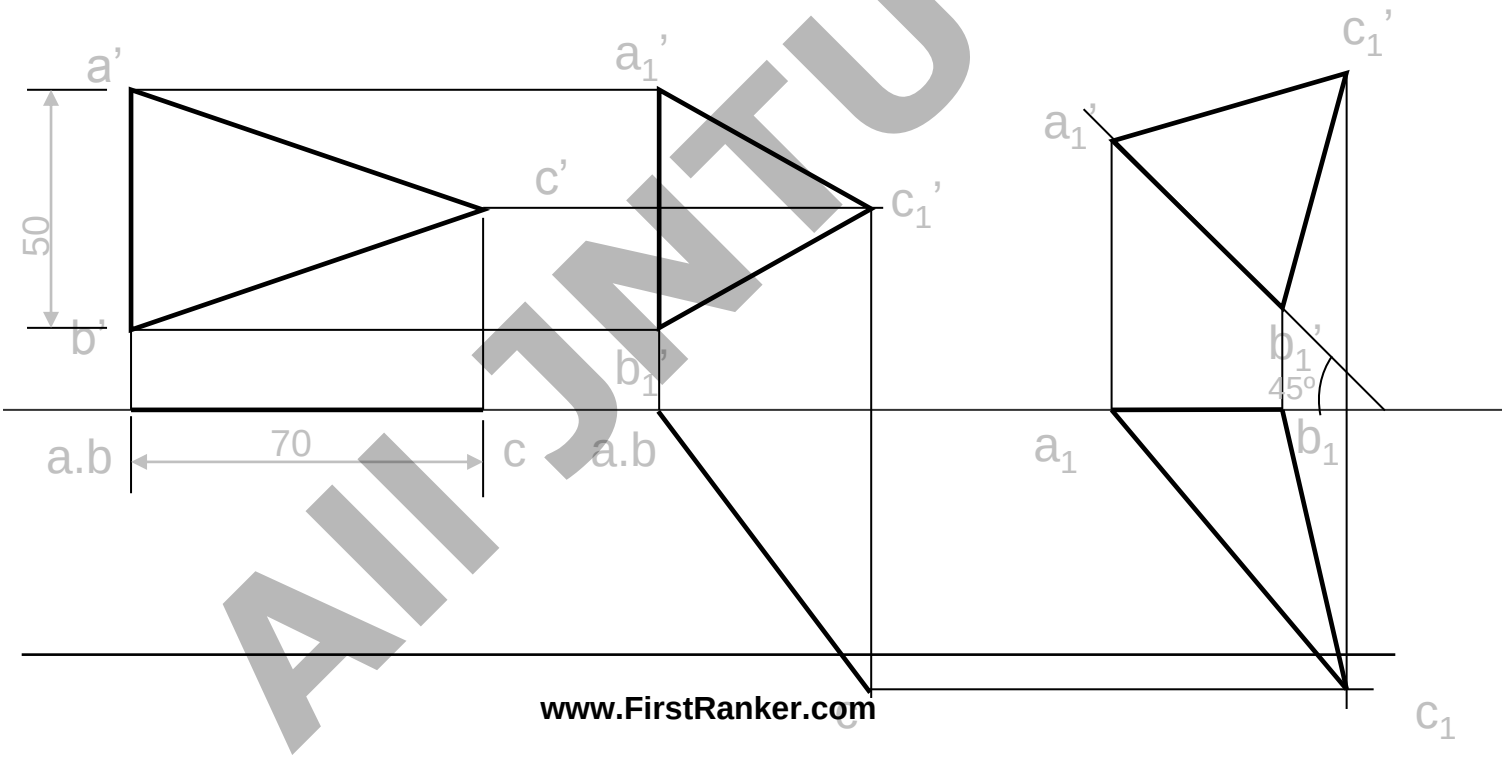

All JNTU World

www.FirstRanker.com

FirstRanker.com
Firstranker's choice
www.FirstRanker.com www.FirstRanker.com

Problem 1:
Rectangle 30mm and 50mm sides is resting on HP on one small side which is 30^0 inclined to VP,while the surface of the plane makes 45^0 inclination with HP. Draw it's projections.

Read problem and answer following
1. Surface inclined to which plane? ----
2. Assumption for initial position? ---
3. So which view will show True shape
4. Which side will be vertical? ---One

Hence begin with TV, draw rectangle drawing one small side vertica

Surface // to Hp Surface inclined to Hp

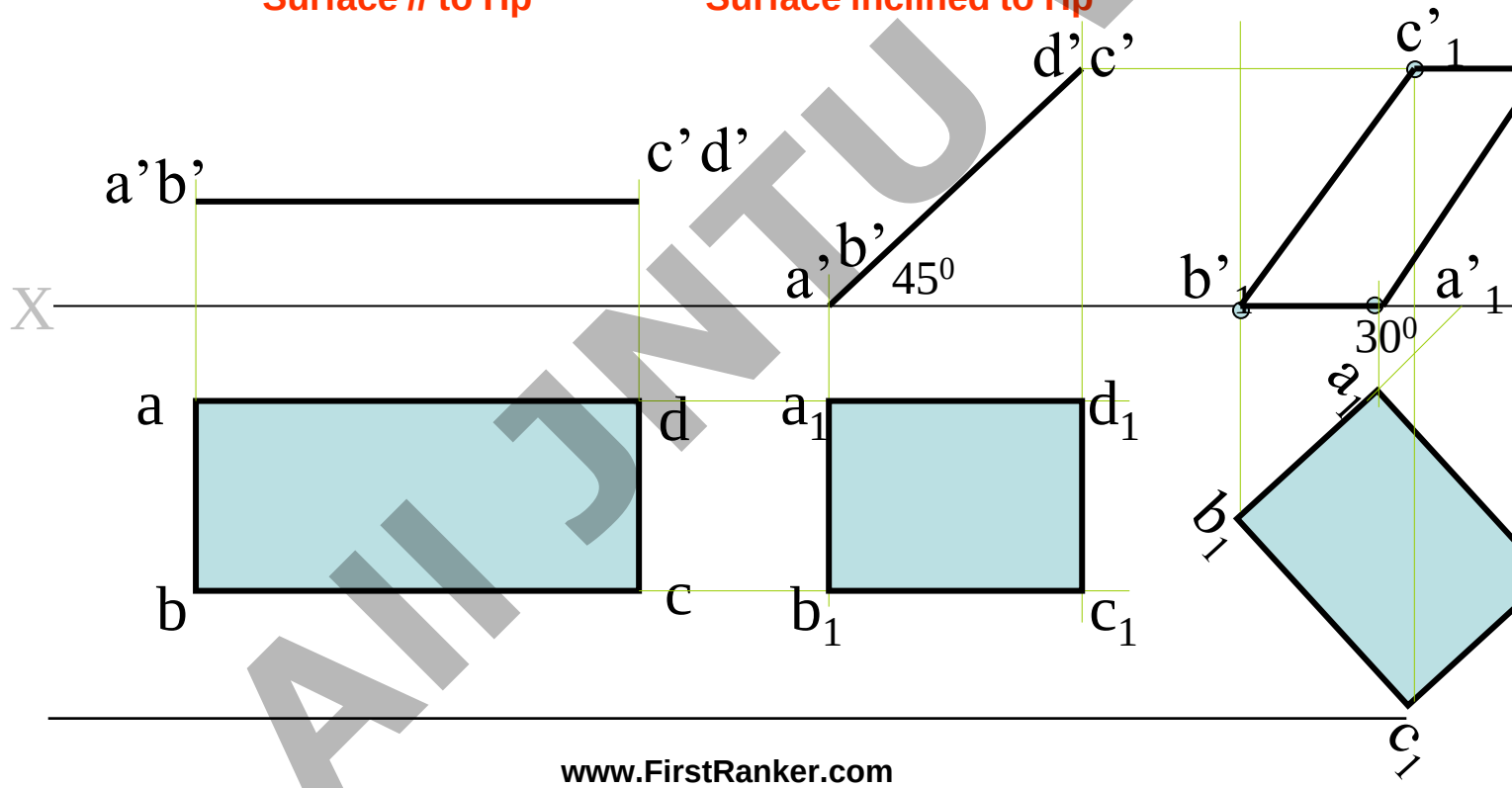

All JNTU World

www.FirstRanker.com

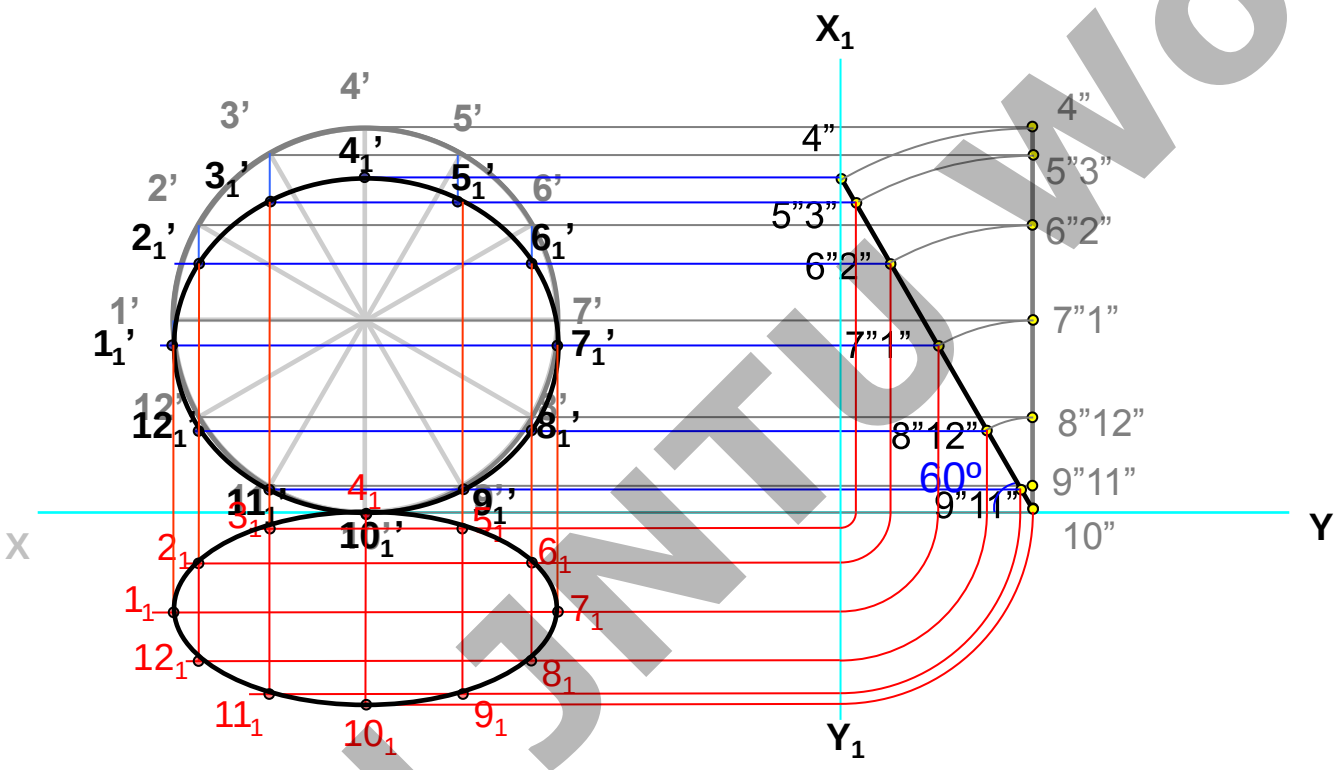

All JNTU World

FirstRanker.com
Firstranker's choice
www.FirstRanker.com www.FirstRanker.com

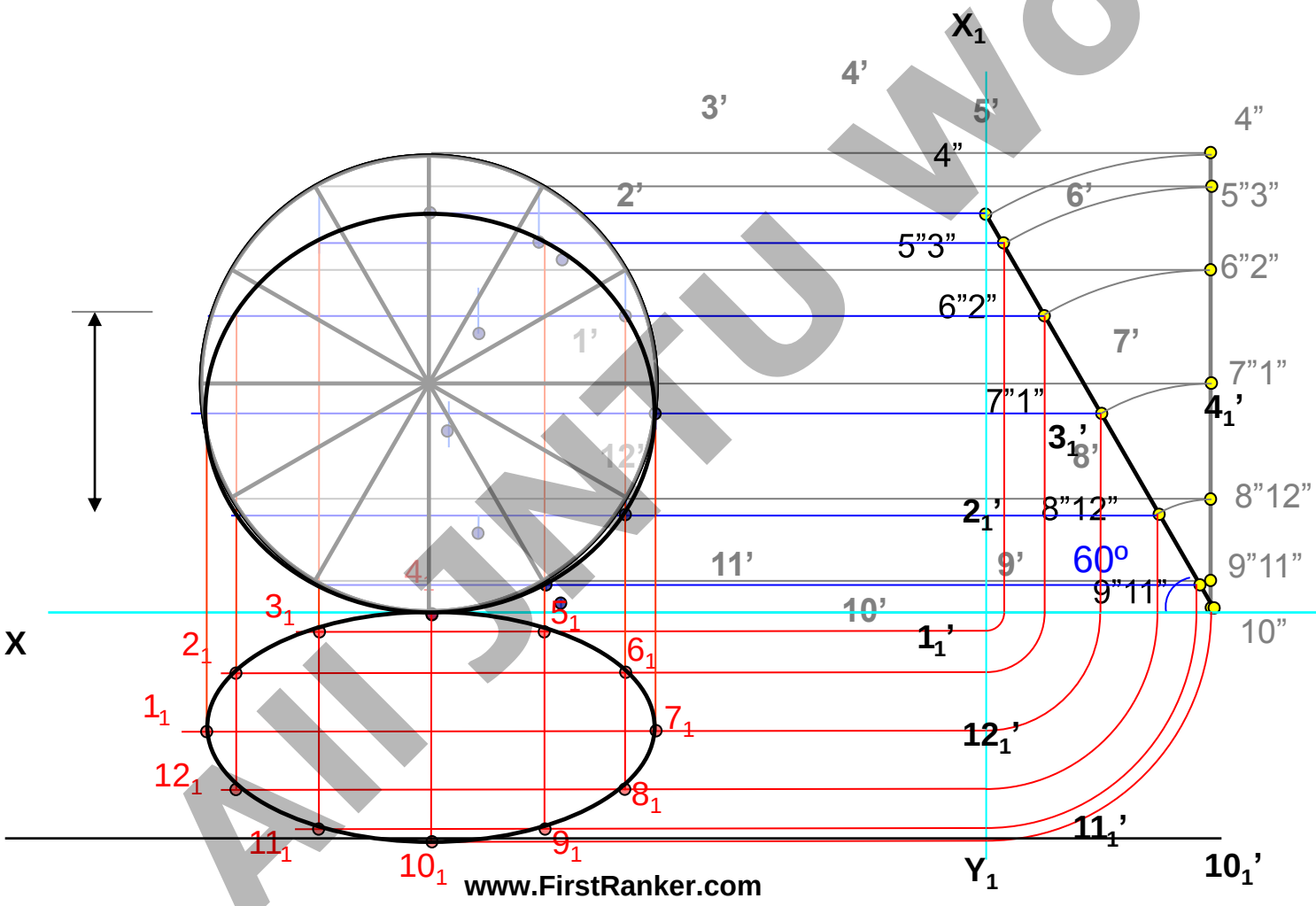

All JNTU World
www.FirstRanker.com

FirstRanker.com
Firstranker's choice
www.FirstRanker.com www.FirstRanker.com

The top view of a plate, the surface of which is inclined at 60º to the HP is a circle diameter. Draw its three views.

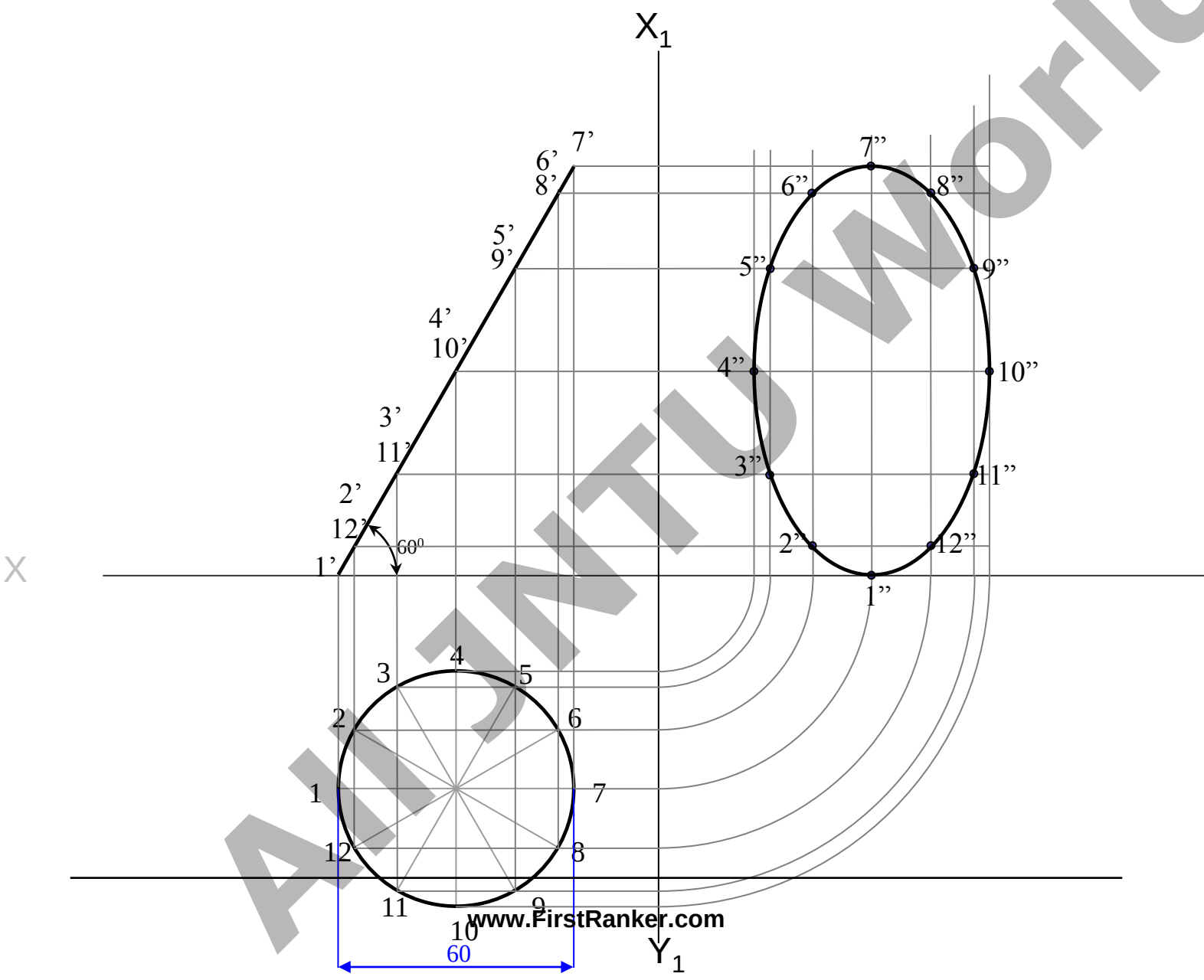

www.FirstRanker.com
AllJNTU World

Problem 12.9:
A $30^0 – 60^0$ set square of longest side 100 mm long, is in VP and 30^0 inclined to HP while it's surface is 45^0 inclined to VP.Draw it's projections

(Surface & Side inclinations directly given)

Read problem and answer followin
1 .Surface inclined to which plane?
2. Assumption for initial position?
3. So which view will show True sh
4. Which side will be vertical? ----

Hence begin with FV, draw trial

keeping longest side v

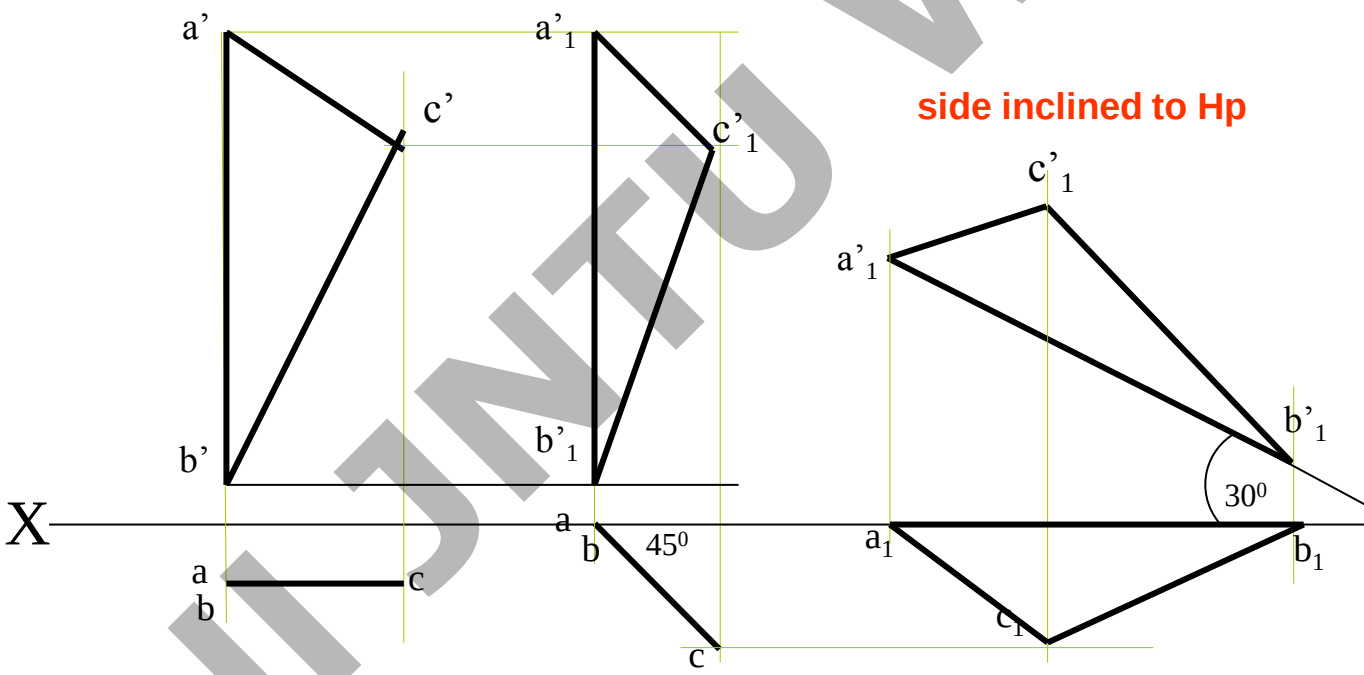

Surface // to Vp **Surface inclined to Vp**

All JNTU World

Problem 3:

A $30^0 – 60^0$ set square of longest side 100 mm long is in VP and it's surface 45^0 inclined to VP. One end of longest side is 10 mm and other end is 35 mm above HP. Draw it's projections

(Surface inclination directly given. Side inclination indirectly given)

Read problem and answer following que

1 .Surface inclined to which plane? -----

2. Assumption for initial position? -----

3. So which view will show True shape?

4. Which side will be vertical? ------long

Hence begin with FV, draw triangle a

keeping longest side vertica

First TWO steps are similar to previous

Note the manner in which side inclinati

End A 35 mm above Hp & End B is 10 r

So redraw 2nd Fv as final Fv placing the

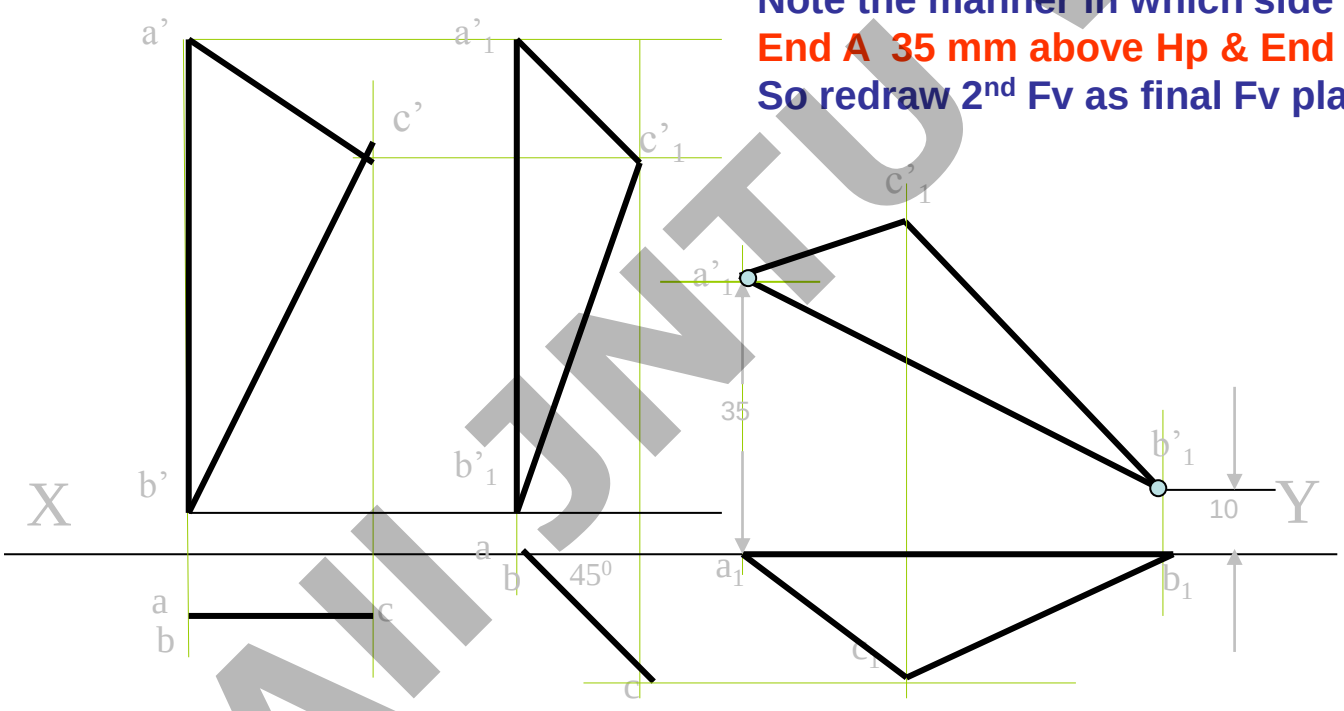

All JNTU World

Problem 4:

A regular pentagon of 30 mm sides is resting on HP on one of it's sides with it's surface 45^0 inclined to HP.
Draw it's projections when the side in HP makes 30^0 angle with VP

SURFACE AND SIDE INCLINATIONS ARE DIRECTLY GIVEN.

Read problem and answer follov

1. Surface inclined to which plane? ---
2. Assumption for initial position? ----
3. So which view will show True shap
4. Which side will be vertical? -------

Hence begin with TV,draw pentago

X-Y line, taking one side vertical.

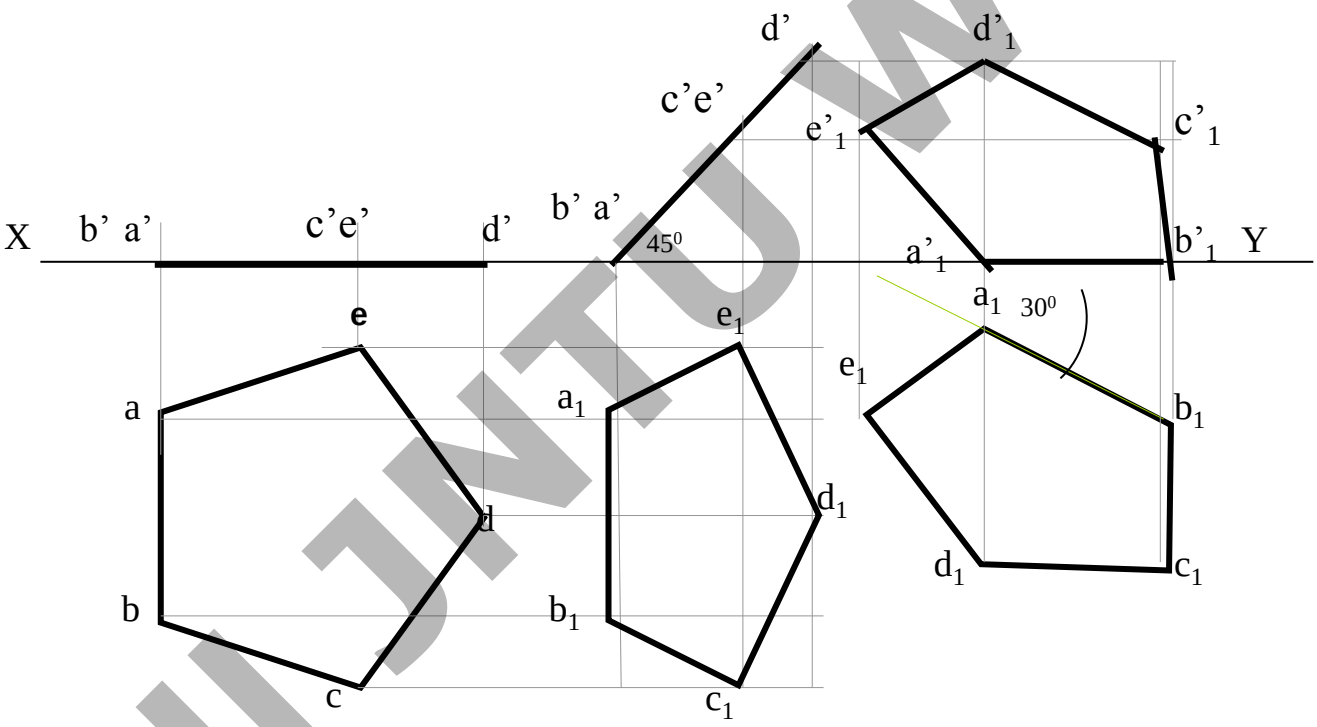

All JNTU World

FirstRanker.com
Firstranker's choice
www.FirstRanker.com www.FirstRanker.com

Problem 5:
A regular pentagon of 30 mm sides is resting on HP on one of it's sides while it's opposite vertex (corner) is 30 mm above HP.
Draw projections when side in HP is 30^0 inclined to VP.

Read problem and answer following
1. Surface inclined to which plane? -
2. Assumption for initial position? --
3. So which view will show True sha
4. Which side will be vertical? -----

Hence begin with TV,draw pentag

X-Y line, taking one side vertical

SURFACE INCLINATION INDIRECTLY GIVEN
SIDE INCLINATION DIRECTLY GIVEN:

ONLY CHANGE is
the manner in which surface inclination is described:
One side on Hp & it's opposite corner 30 mm above Hp.
Hence redraw 1st Fv as a 2nd Fv making above arrangement.
Keep a'b' on xy & d' 30 mm above xy.

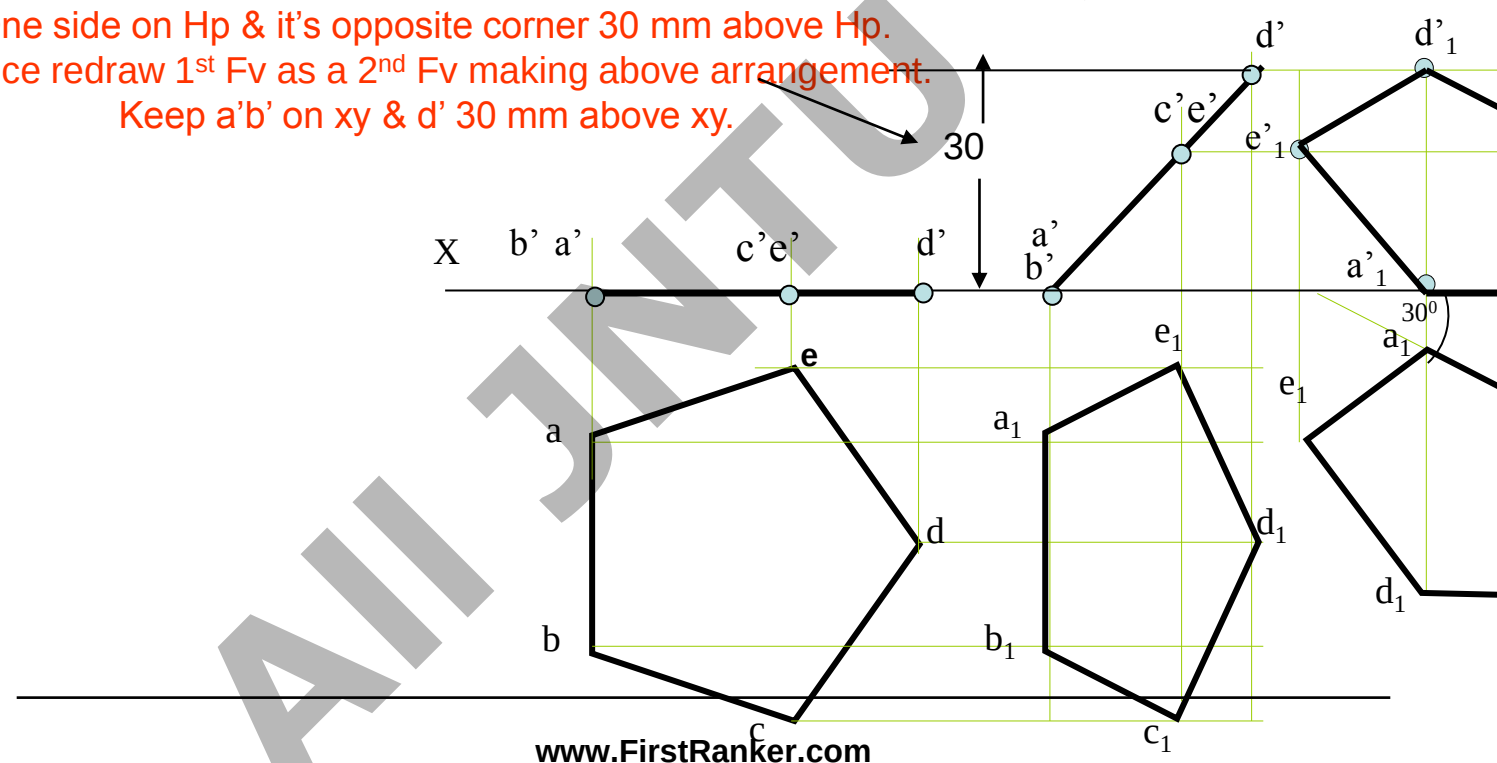

All JNTU World

www.FirstRanker.com

Problem 8: A circle of 50 mm diameter is resting on Hp on end A of it's diameter AC which is 30^0 inclined to Hp while it's Tv is 45^0 inclined to Vp.Draw it's projections.

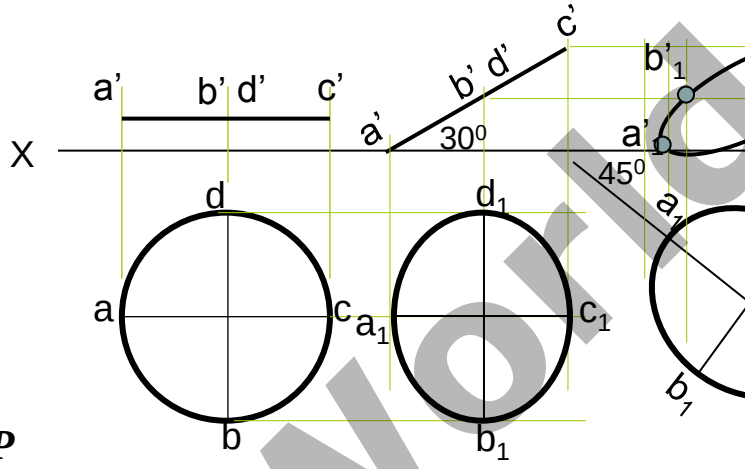

Read problem and answer following questions

1. Surface inclined to which plane? ------- ***HP***
2. Assumption for initial position? ------ ***// to HP***
3. So which view will show True shape? --- ***TV***
4. Which diameter horizontal? ---------- ***AC***

Hence begin with TV,draw rhombus below X-Y line, taking longer diagonal // to X-Y

The difference in these two problems
In problem no.8 inclination of Tv of t
given,It could be drawn directly as sl
While in no.9 angle of AC itself i.e. it
given. Hence here angle of TL is take
Is drawn and then LTV I.e. a_1 c_1 is ma
final TV was completed.Study illustra

Problem 9: A circle of 50 mm diameter is resting on Hp on end A of it's diameter AC which is 30^0 inclined to Hp while it makes 45^0 inclined to Vp. Draw it's projections.

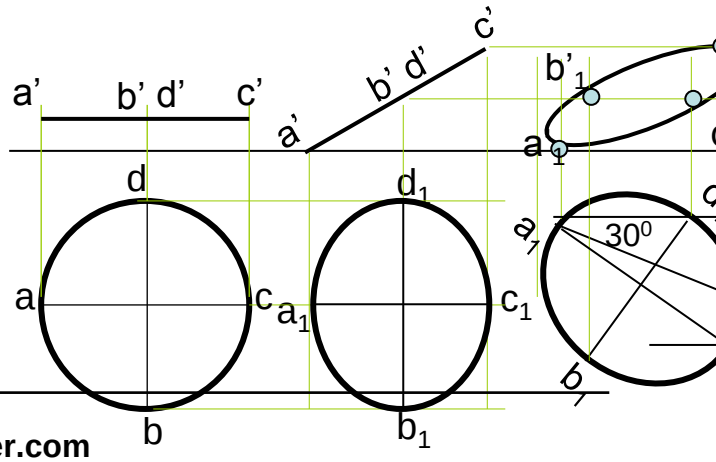

Note the difference in construction of 3rd step in both solutions.

All JNTU World

FirstRanker.com
Firstranker's choice
www.FirstRanker.com www.FirstRanker.com

Problem 10: End A of diameter AB of a circle is in HP A nd end B is in VP.Diameter AB, 50 mm long is 30^0 & 60^0 inclined to HP & VP respectively. Draw projections of circle.

Read problem and answer following
1. Surface inclined to which plane? -
2. Assumption for initial position? --
3. So which view will show True sha
4. Which diameter horizontal? -----

Hence begin with TV,draw CIRC
X-Y line, taking DIA. AB // to X

The problem is similar to previous problem of circle – no.9.
But in the 3rd step there is one more change.
Like 9th problem True Length inclination of dia.AB is definitely expected
but if you carefully note - the the SUM of it's inclinations with HP & VP is 90^0.
Means Line AB lies in a Profile Plane.
Hence it's both Tv & Fv must arrive on one single projector.
So do the construction accordingly AND ***note the case carefully***..

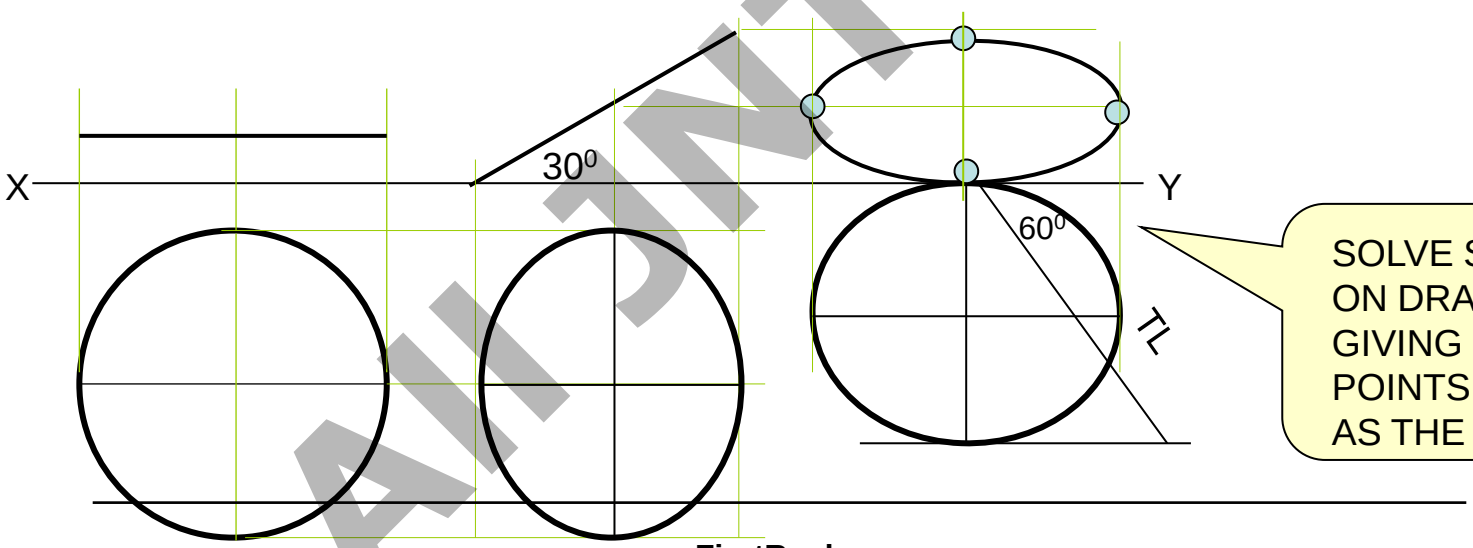

SOLVE SEPAR
ON DRAWING
GIVING NAME
POINTS AS US
AS THE CASE

All JNTU World

www.FirstRanker.com

Problem 11:

A hexagonal lamina has its one side in HP and
Its apposite parallel side is 25mm above Hp and
In Vp. Draw it's projections.
Take side of hexagon 30 mm long.

ONLY CHANGE is the manner in which surface inclination is described:
One side on Hp & it's opposite side 25 mm above Hp.
Hence redraw 1st Fv as a 2nd Fv making above arrangement.
Keep a'b' on xy & d'e' 25 mm above xy.

Read problem and answer follow
1. Surface inclined to which plan
2. Assumption for initial position
3. So which view will show True
4. Which diameter horizontal? -
Hence begin with TV,draw rh
X-Y line, taking longer diago

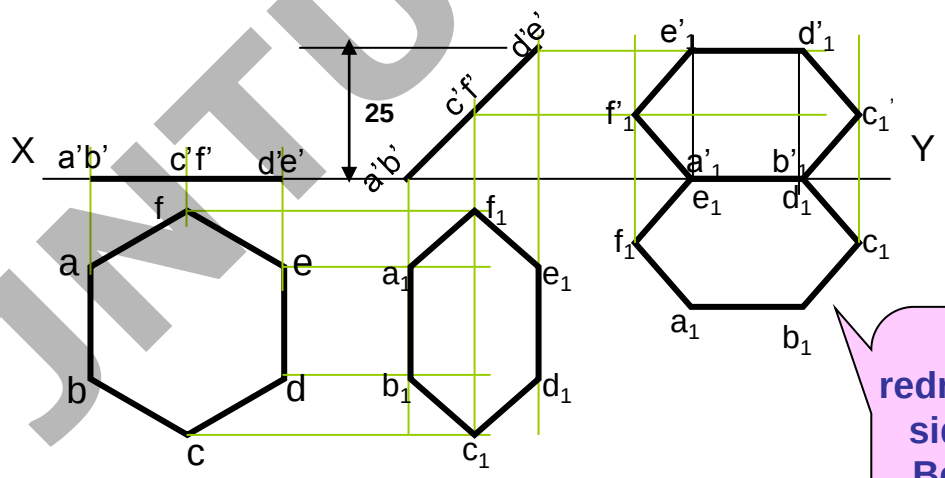

A
redraw
side
Beca
as sa

All JNTU World

FREELY SUSPENDED CASES.

Problem 12:
An isosceles triangle of 40 mm long base side, 60 mm long altitude Is freely suspended from one corner of Base side.It's plane is 45⁰ inclined to Vp. Draw it's projections.

IMPORTANT POINTS

1.In this case the plane of the figure always remains *p*
2.It may remain parallel or inclined to Vp.
3.Hence ***TV*** in this case will be always a ***LINE view.***
4.Assuming surface // to Vp, draw true shape in suspe
(Here keep *line joining* ***point of contact & centroi***
5.Always begin with FV as a True Shape but in a susp
AS shown in 1st FV.

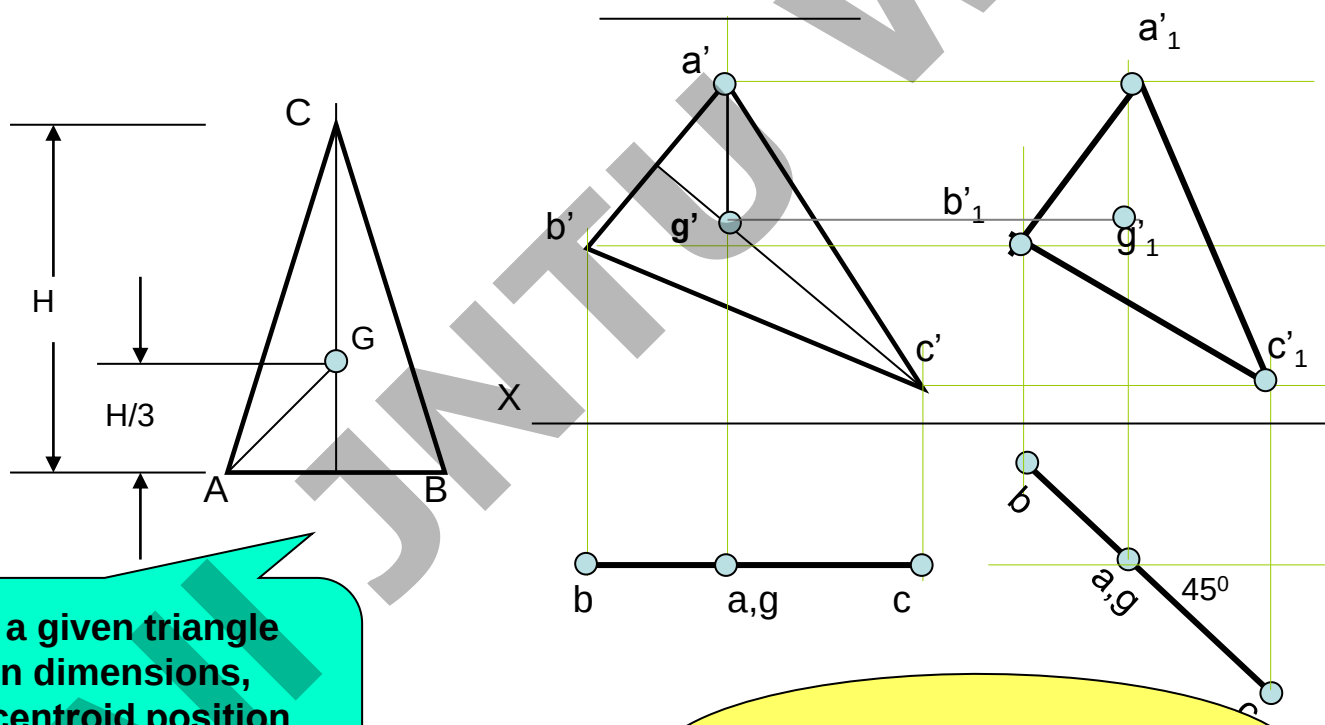

First draw a given triangle With given dimensions, Locate it's centroid position And join it with point of suspension.

Similarly solve next problem of Semi-circle

All JNTU World

FirstRanker.com
Firstranker's choice
www.FirstRanker.com www.FirstRanker.com

IMPORTANT POINTS

1.In this case the plane of the figure always remains *p*
2.It may remain parallel or inclined to Vp.
3.Hence ***TV*** in this case will be always a ***LINE view.***
4.Assuming surface // to Vp, draw true shape in suspe
(Here keep *line joining* ***point of contact & centroi***
5.Always begin with FV as a True Shape but in a susp
AS shown in 1st FV.

Problem 13

:A semicircle of 100 mm diameter is suspended from a point on its straight edge 30 mm from the midpoint of that edge so that the surface makes an angle of 45^0 with VP.
Draw its projections.

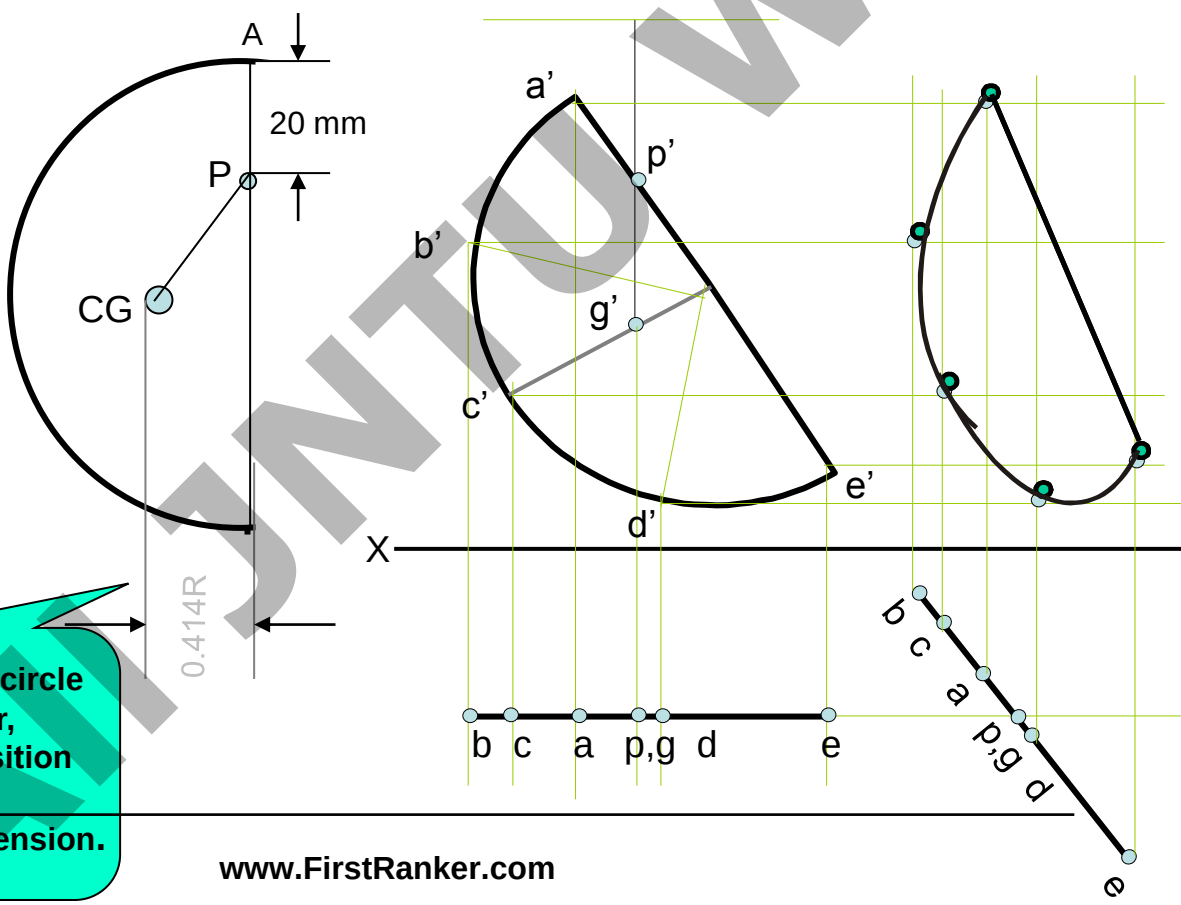

First draw a given semicircle
With given diameter,
Locate it's centroid position
And
join it with point of suspension.

AITJNTU World

www.FirstRanker.com

FirstRanker.com
Firstranker's choice
www.FirstRanker.com www.FirstRanker.com

To determine true shape of plane figure when it's projections are gi
BY USING AUXILIARY PLANE METHOD

WHAT WILL BE THE PROBLEM?
Description of final Fv & Tv will be given.
You are supposed to determine true shape of

Follow the below given steps:

1. Draw the given Fv & Tv as per the given information in problem.
2. Then among all lines of Fv & Tv select a line showing True Length (T.L.) (It's other view must be // to xy)
3. Draw x_1-y_1 perpendicular to this line showing T.L.
4. Project view on x_1-y_1 (it must be a line view)
5. Draw x_2-y_2 // to this line view & project new view on it.

It will be the required answer i.e. True Shape.

The facts you must know:-
If you carefully study and observe the solutions of all
You will find
IF ONE VIEW IS A LINE VIEW & THAT TOO PARA
THEN AND THEN IT'S OTHER VIEW WILL SHOW

NOW FINAL VIEWS ARE ALWAYS SOME SHAPE, NOT LINE VIEWS:
SO APPLYING ABOVE METHOD:
WE FIRST CONVERT ONE VIEW IN INCLINED LINE VIEW .(By using x1y1 aux.plane)
THEN BY MAKING IT // TO X2-Y2 WE GET TRUE SHAPE.

Stu
Fo

All JNTU World
www.FirstRanker.com

FirstRanker.com
Firstranker's choice
www.FirstRanker.com www.FirstRanker.com

Problem 14 Tv is a triangle abc. Ab is 50 mm long, angle cab is 300 and angle cba is
a'b'c' is a Fv. a' is 25 mm, b' is 40 mm and c' is 10 mm above Hp respectively. Draw pro
of that figure and find it's true shape.

As per the procedure-

1.First draw Fv & Tv as per the data.
2.In Tv line ab is // to xy hence it's other view a'b' is TL. So draw x_1y_1 perpendicular to it.
3.Project view on x1y1.
   a) First draw projectors from a'b' & c' on x_1y_1.
   b) from xy take distances of a,b & c(Tv) mark on these projectors from x_1y_1. Name po
   c) This line view is an Aux.Tv. Draw x_2y_2 // to this line view and project Aux. Fv on it.
      for that from x_1y_1 take distances of a'b' & c' and mark from x_2y= on new projectors.
4.Name points a'_1 b'_1 & c'_1 and join them. This will be the required true shape.

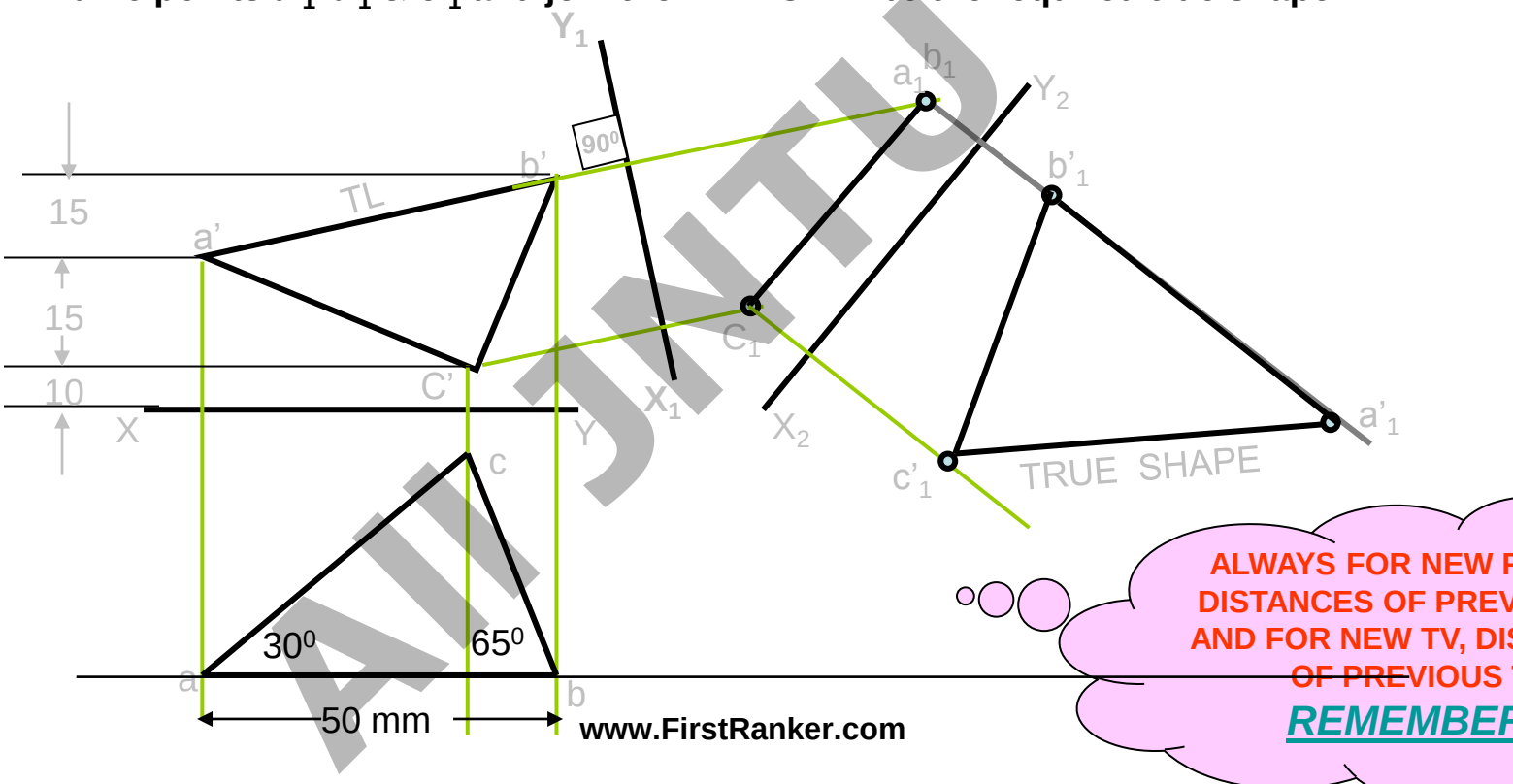

ALWAYS FOR NEW F
DISTANCES OF PREV
AND FOR NEW TV, DIS
OF PREVIOUS
REMEMBER

All JNTU World
www.FirstRanker.com

Problem 15: Fv & Tv of a triangular plate are shown.
Determine it's true shape.

USE SAME PROCEDURE STEPS OF PREVIOUS PROBLEM:
BUT THERE IS ONE DIFFICULTY:

NO LINE IS // TO XY IN ANY VIEW.
MEANS NO TL IS AVAILABLE.

IN SUCH CASES DRAW ONE LINE // TO XY IN ANY VIEW & IT'S OTHER VIEW CAN BE CONSIDERED AS TL FOR THE PURPOSE.

HERE a' 1' line in Fv is drawn // to xy.
HENCE it's Tv a-1 becomes TL.

THEN FOLLOW SAME STEPS AND DETERMINE TRUE SHAPE.
(STUDY THE ILLUSTRATION)

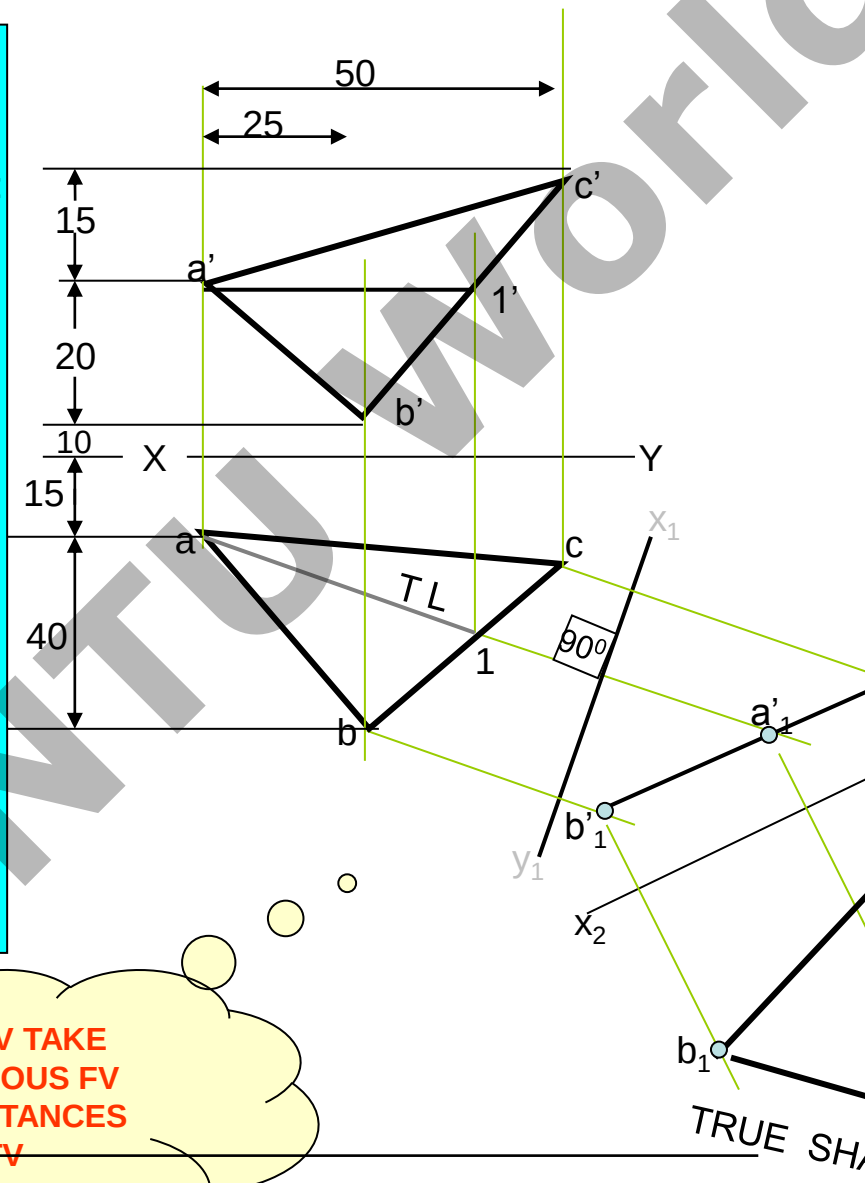

ALWAYS FOR NEW FV TAKE DISTANCES OF PREVIOUS FV AND FOR NEW TV, DISTANCES OF PREVIOUS TV
REMEMBER!!

All JNTU World

PROBLEM 16: **Fv & Tv both are circles of 50 mm diameter. Determine true shape of a**

ADOPT SAME PROCEDURE.
a c is considered as line // to xy.
Then a'c' becomes TL for the purpose.
Using steps properly true shape can be
Easily determined.

Study the illustration.

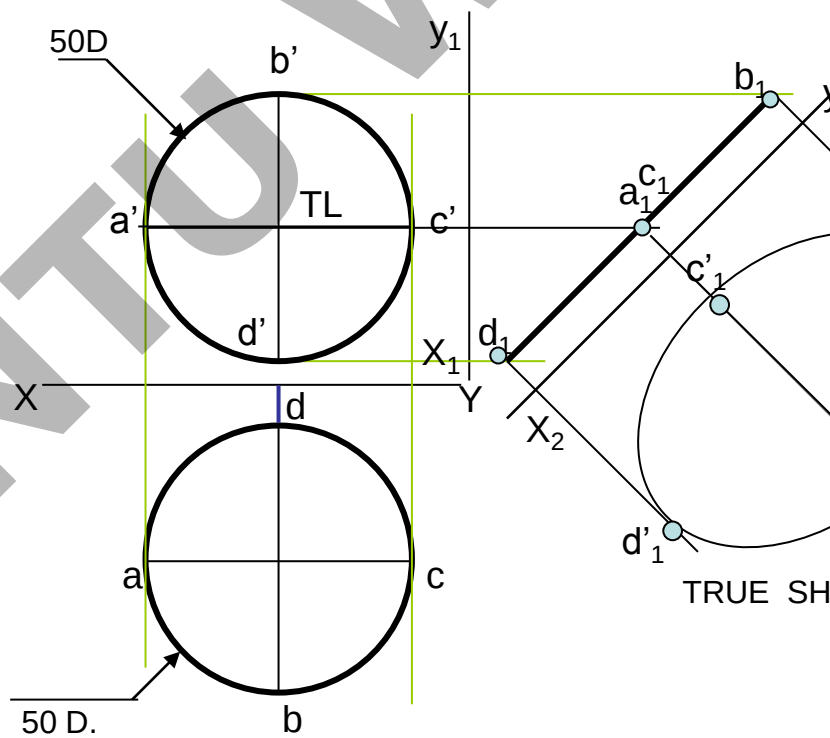

ALWAYS, FOR NEW FV TAKE DISTANCES OF PREVIOUS FV AND FOR NEW TV, DISTANCES OF PREVIOUS TV
REMEMBER!!

All JNTU World

Problem 17 : Draw a regular pentagon of 30 mm sides with one side 30^0 inclined to xy. This figure is Tv of some plane whose Fv is A line 45^0 inclined to xy. Determine it's true shape.

IN THIS CASE ALSO TRUE LENGTH IS NOT AVAILABLE IN ANY VIEW.

BUT ACTUALLY WE DONOT REQUIRE TL TO FIND IT'S TRUE SHAPE, AS ONE VIEW (FV) IS ALREADY A LINE VIEW. SO JUST BY DRAWING X1Y1 // TO THIS VIEW WE CAN PROJECT VIEW ON IT AND GET TRUE SHAPE:

STUDY THE ILLUSTRATION..

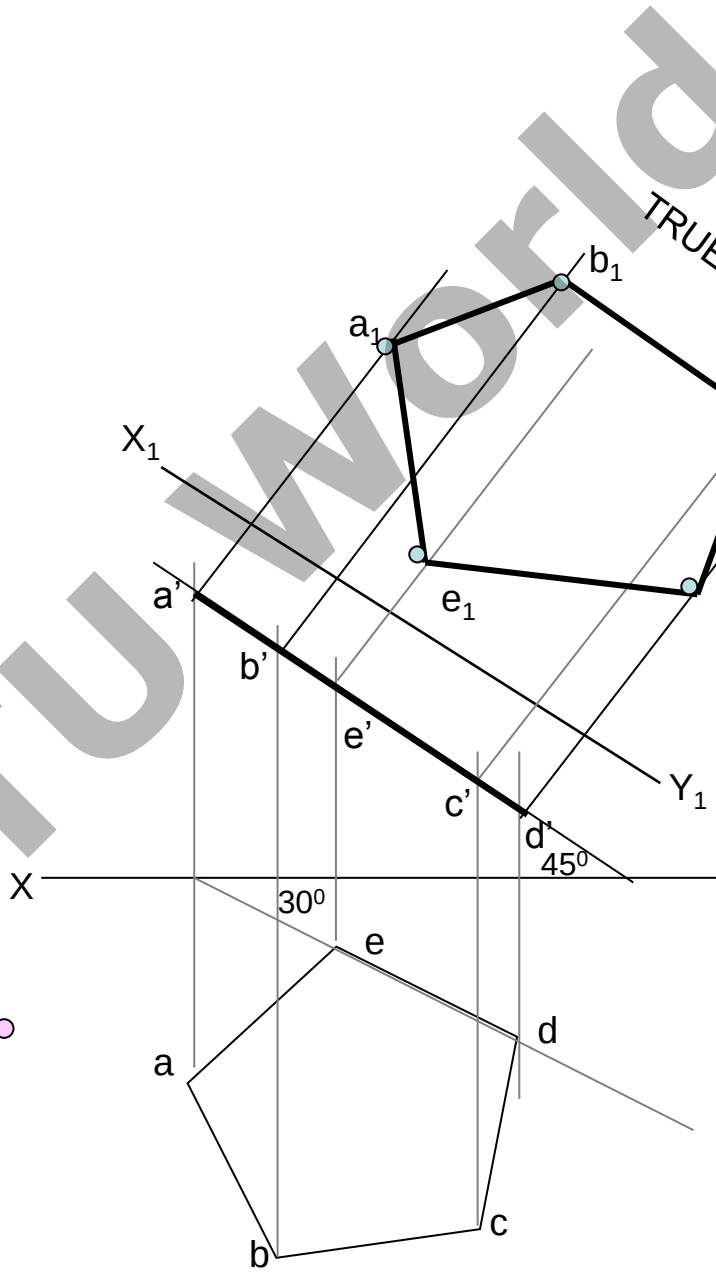

ALWAYS FOR NEW FV TAKE DISTANCES OF PREVIOUS FV AND FOR NEW TV, DISTANCES OF PREVIOUS TV

REMEMBER!!

All JNTU World

FirstRanker.com
Firstranker's choice

UNIT III

All JNTU World

FirstRanker.com
Firstranker's choice
www.FirstRanker.com www.FirstRanker.com

SOLIDS

To understand and remember various solids in this subject p
those are classified & arranged in to two major group

Group A	Group B
Solids having top and base of same shape	Solids having base of some and just a point as a top, cal

Cylinder

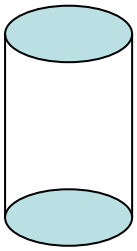

Cone

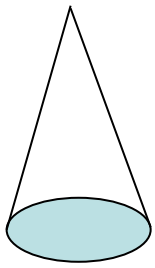

Prisms

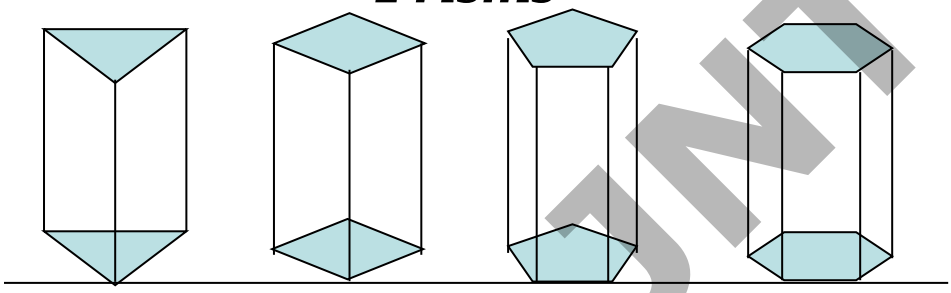

Triangular Square Pentagonal Hexagonal

Pyramids

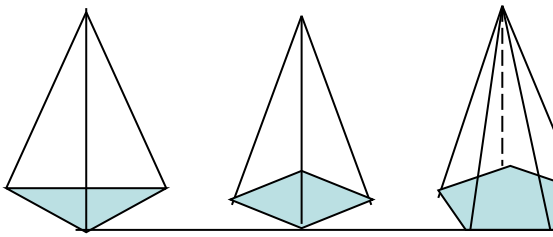

Triangular Square Pentag

Cube

(A solid having six square faces)

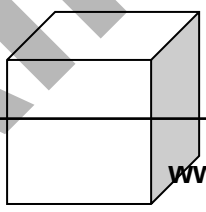

Tetrahedron

(A solid having Four triangular faces)

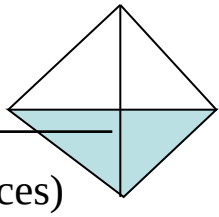

www.FirstRanker.com
All JNTU World

FirstRanker.com
Firstranker's choice
www.FirstRanker.com www.FirstRanker.com

SOLIDS

Dimensional parameters of different solids.

Square Prism **Square Pyramid** **Cylinder** **C**

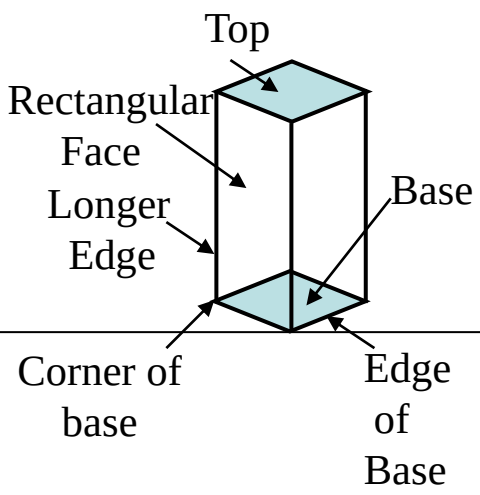

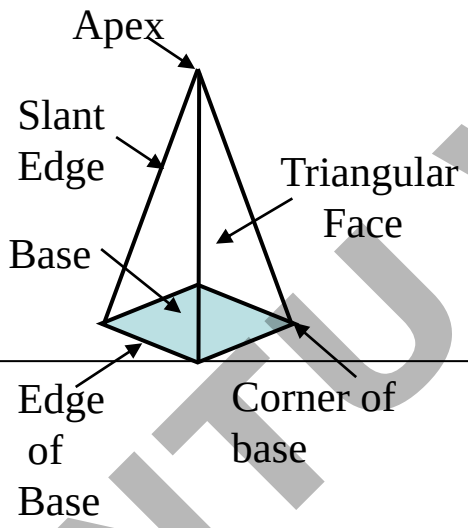

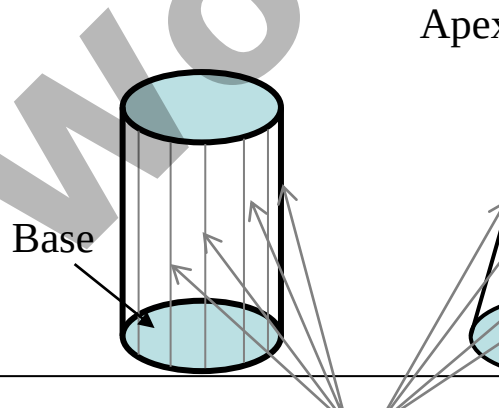

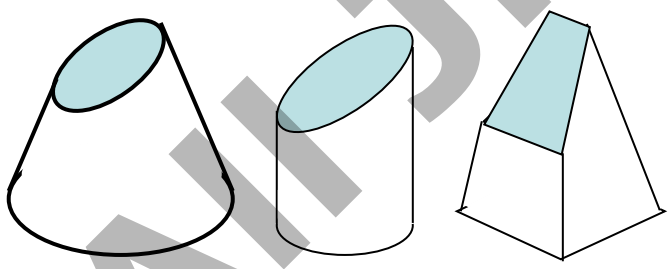

Sections of solids(top & base not parallel)

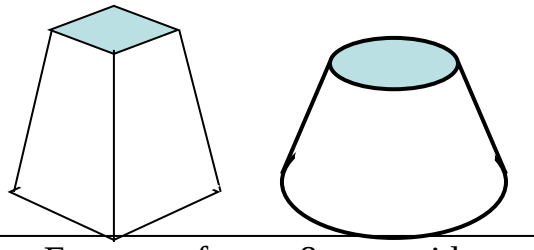

Frustum of cone & pyramids.
(top & base parallel to each other)

AllJNTU World
www.FirstRanker.com

FirstRanker.com
Firstranker's choice
www.FirstRanker.com www.FirstRanker.com

STANDING ON H.P
On it's base.
(Axis perpendicular to Hp
And // to Vp.)

RESTING ON H.P
On one point of base circle.
(Axis inclined to Hp
And // to Vp)

LYING ON H.P
On one generator.
(Axis inclined to Hp
And // to Vp)

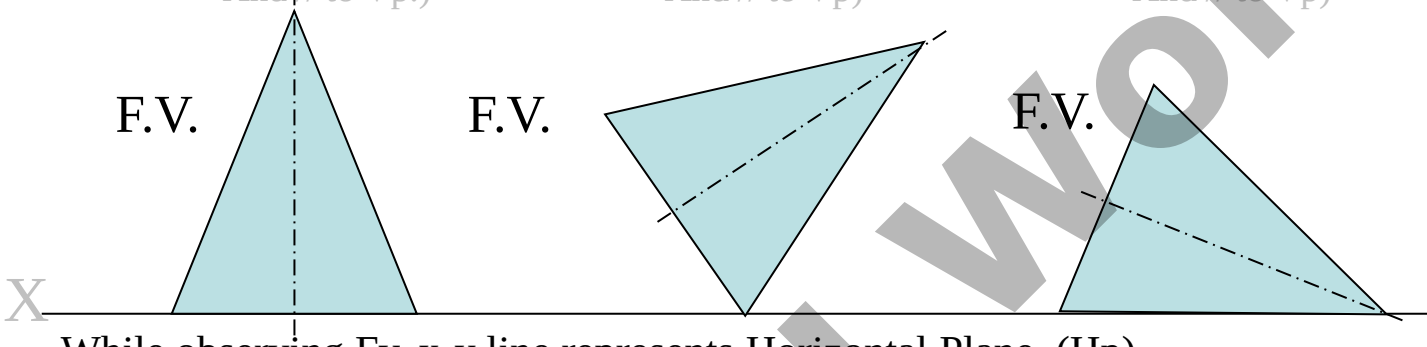

While observing Fv, x-y line represents Horizontal Plane. (Hp)

X While observing Tv, x-y line represents Vertical Plane. (Vp)

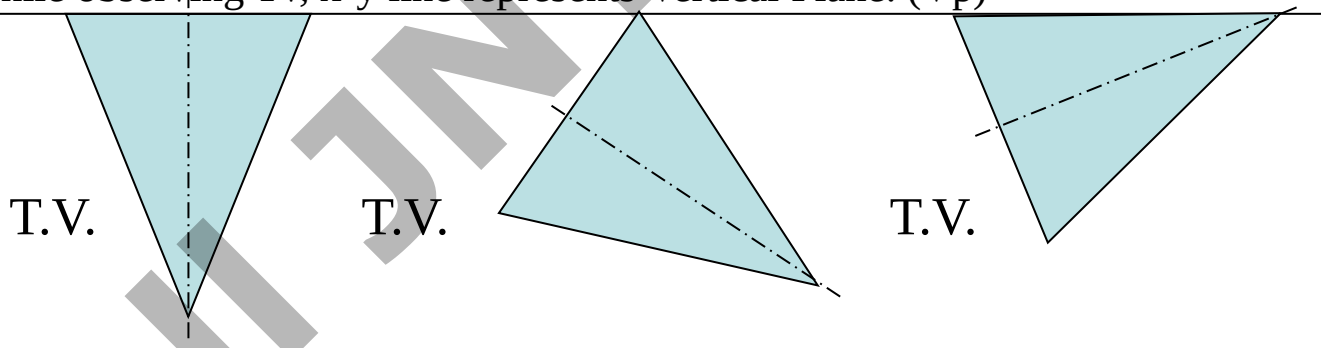

STANDING ON V.P
On it's base.
Axis perpendicular to Vp
And // to Hp

RESTING ON V.P
On one point of base circle.
Axis inclined to Vp
And // to Hp

LYING ON V.P
On one generator.
Axis inclined to Vp
And // to Hp

www.FirstRanker.com
All JNTU World

FirstRanker.com
Firstranker's choice
www.FirstRanker.com www.FirstRanker.com

STEPS TO SOLVE PROBLEMS IN SOLIDS

Problem is solved in three steps:

STEP 1: ASSUME SOLID STANDING ON THE PLANE WITH WHICH IT IS MAKING INCLIN
(IF IT IS INCLINED TO HP, ASSUME IT STANDING ON HP)
(IF IT IS INCLINED TO VP, ASSUME IT STANDING ON VP)
IF STANDING ON HP - IT'S TV WILL BE TRUE SHAPE OF IT'S BASE OR TOP:
IF STANDING ON VP - IT'S FV WILL BE TRUE SHAPE OF IT'S BASE OR TOP.
BEGIN WITH THIS VIEW:
IT'S OTHER VIEW WILL BE A RECTANGLE (IF SOLID IS ***CYLINDER OR ONE OF***
IT'S OTHER VIEW WILL BE A TRIANGLE (IF SOLID IS ***CONE OR ONE OF THE***
DRAW FV & TV OF THAT SOLID IN STANDING POSITION:

STEP 2: CONSIDERING SOLID'S INCLINATION (AXIS POSITION) DRAW IT'S FV & TV.

STEP 3: IN LAST STEP, CONSIDERING REMAINING INCLINATION, DRAW IT'S FINAL FV

GENERAL PATTERN (THREE STEPS) OF SOLUTION:

GROUP B SOLID. CONE

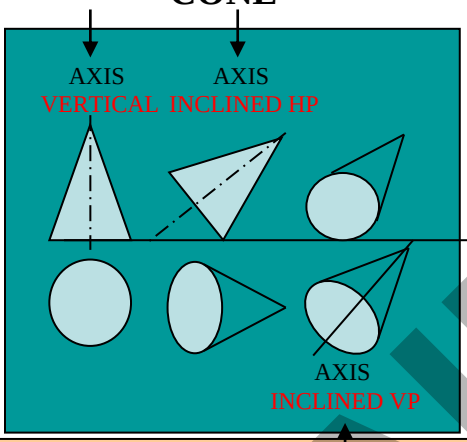

Three steps
If solid is inclined to Hp

GROUP A SOLID. CYLINDER

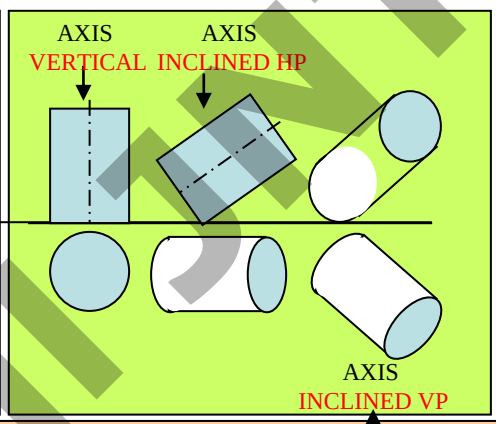

Three steps
If solid is inclined to Hp

GROUP B SOLID. CONE

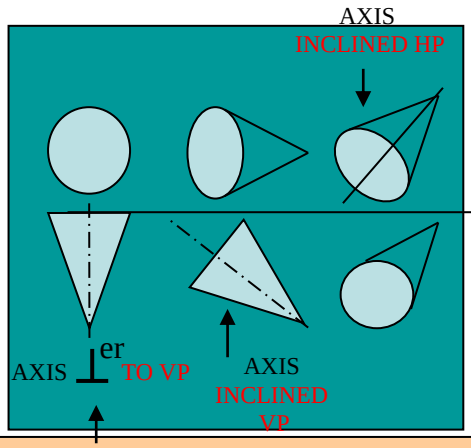

Three steps
If solid is inclined to Vp

GRO

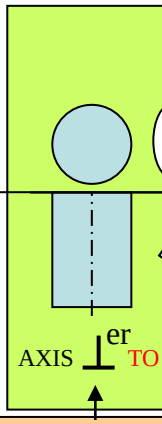

If soli

www.FirstRanker.com
Study Next *Twelve* Problems and Practice them separatel
All JNTU World

FirstRanker.com
Firstranker's choice
www.FirstRanker.com www.FirstRanker.com

CATEGORIES OF ILLUSTRATED PROBLEMS

PROBLEM NO.1, 2, 3, 4	GENERAL CASES OF SOLIDS INCLINED TO H
PROBLEM NO. 5 & 6	CASES OF CUBE & TETRAHEDRON
PROBLEM NO. 7	CASE OF FREELY SUSPENDED SOLID WITH
PROBLEM NO. 8	CASE OF CUBE (WITH SIDE VIEW)
PROBLEM NO. 9	CASE OF TRUE LENGTH INCLINATION WIT
PROBLEM NO. 10 & 11	CASES OF COMPOSITE SOLIDS. (AUXILIARY
PROBLEM NO. 12	CASE OF A FRUSTUM (AUXILIARY PLANE)

All JNTU World

www.FirstRanker.com

FirstRanker.com
Firstranker's choice
www.FirstRanker.com www.FirstRanker.com

Q Draw the projections of a pentagonal prism , base 25 mm side and axis 50 r
resting on one of its rectangular faces on the H.P. with the axis inclined at 45°

As the axis is to be inclined with the VP, in the first view it must be kept perpe
VP i.e. true shape of the base will be drawn in the FV with one side on XY line

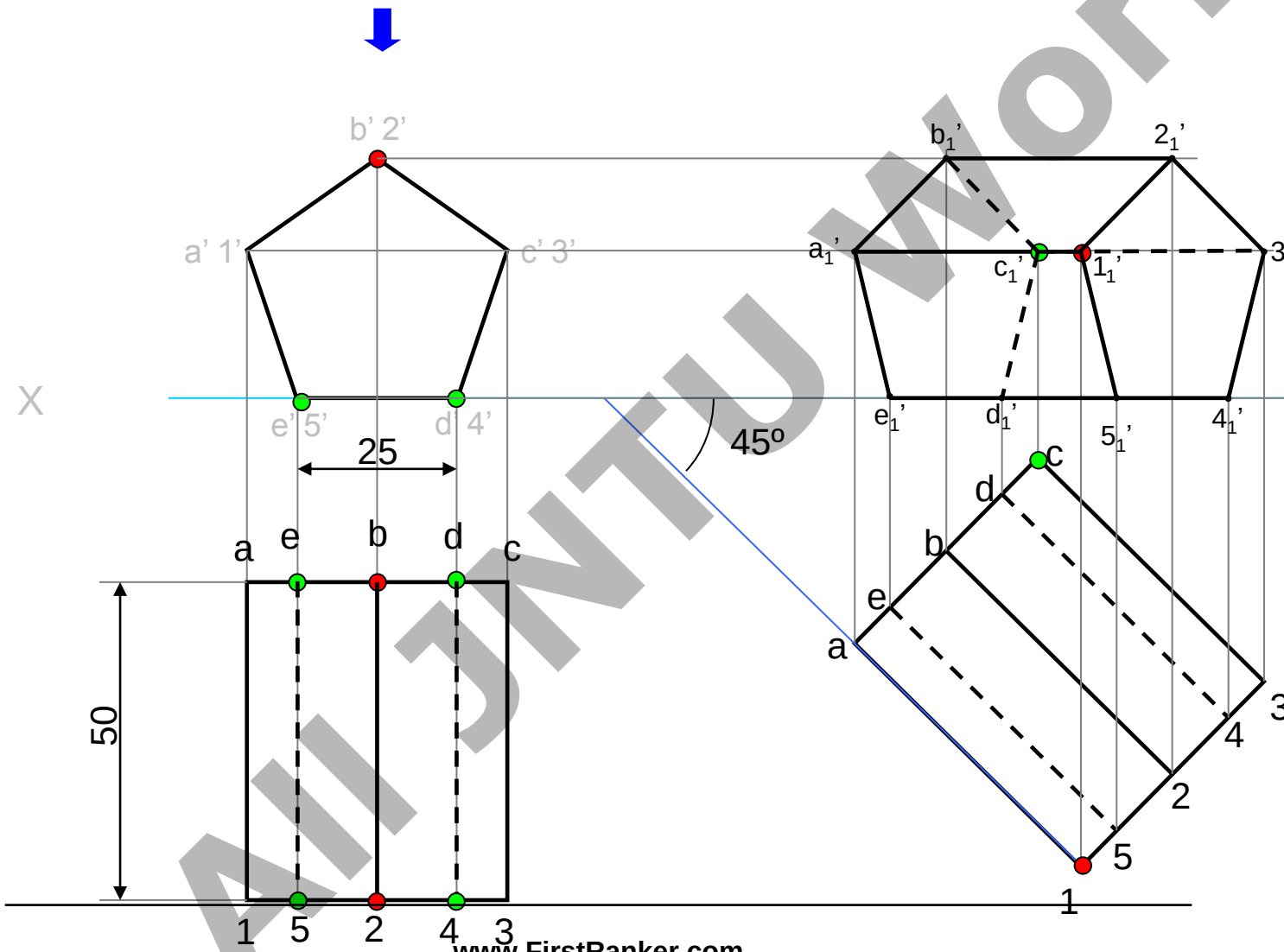

All JNTU World

www.FirstRanker.com

FirstRanker.com
Firstranker's choice
www.FirstRanker.com www.FirstRanker.com

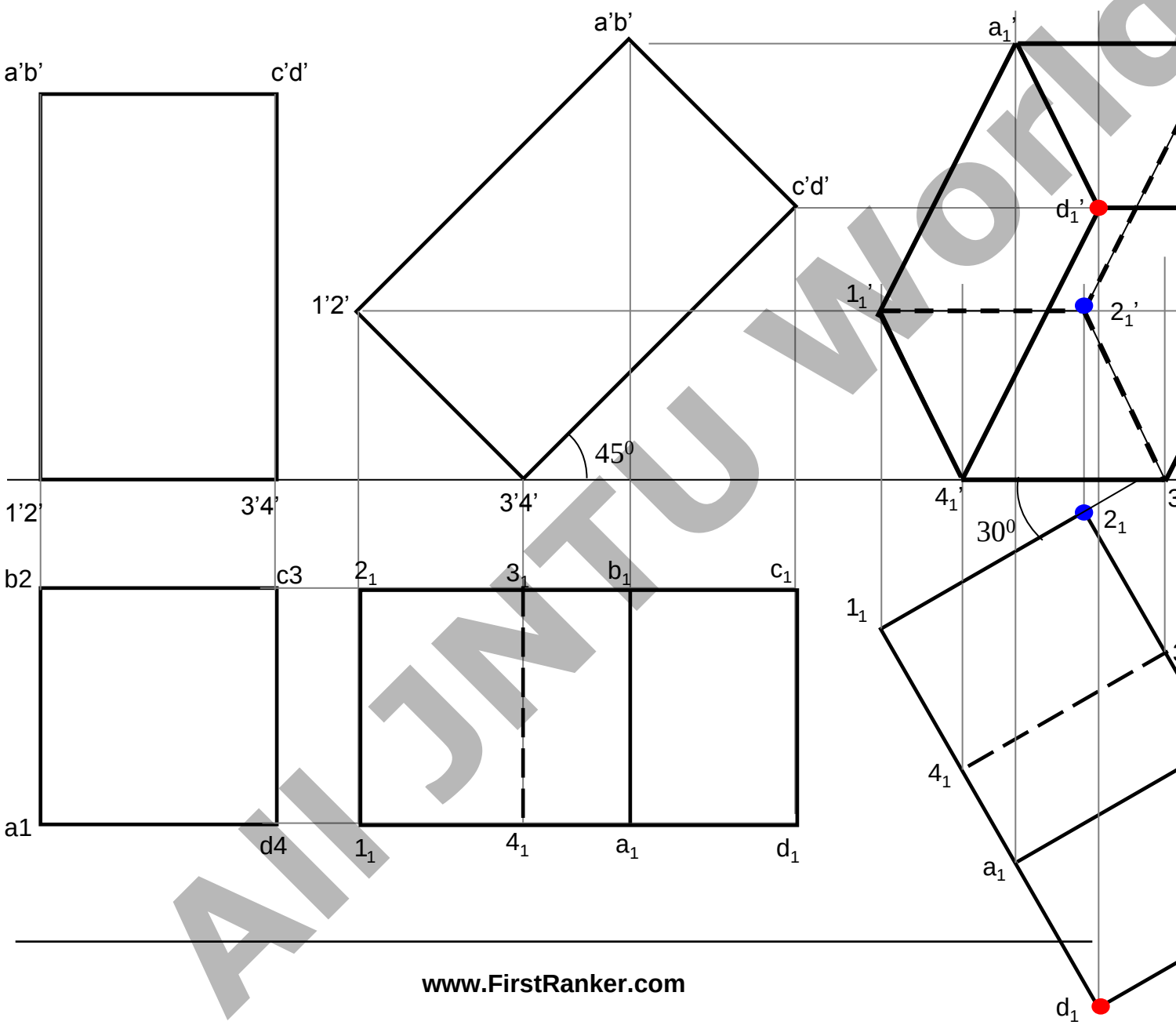

All JNTU World

www.FirstRanker.com

FirstRanker.com
Firstranker's choice
www.FirstRanker.com www.FirstRanker.com

Problem 13.19: Draw the projections of a cone, base 45 mm diameter and axis 50 mm long, when it is resting on the ground on a point on its base circle with **(a)** the axis making an angle of 30º with the HP and 45º with the VP **(b)** the axis making an angle of 30º with the HP and its top view making 45º with the VP

Steps

(1) Draw the TV & FV of the cone assuming its
(2) To incline axis at 30º with the HP, incline the
and draw the FV and then the TV.
(3) For part (a), to find β, draw a line at 45º with
mm length. Draw the locus of the end of axis. T
length equal to TV of the axis when it is inclined
redraw the TV, keeping the axis at new position.
FV
(4) For part (b), draw a line at 45º with XY in th
the TV, keeping the axis at new position. Again c

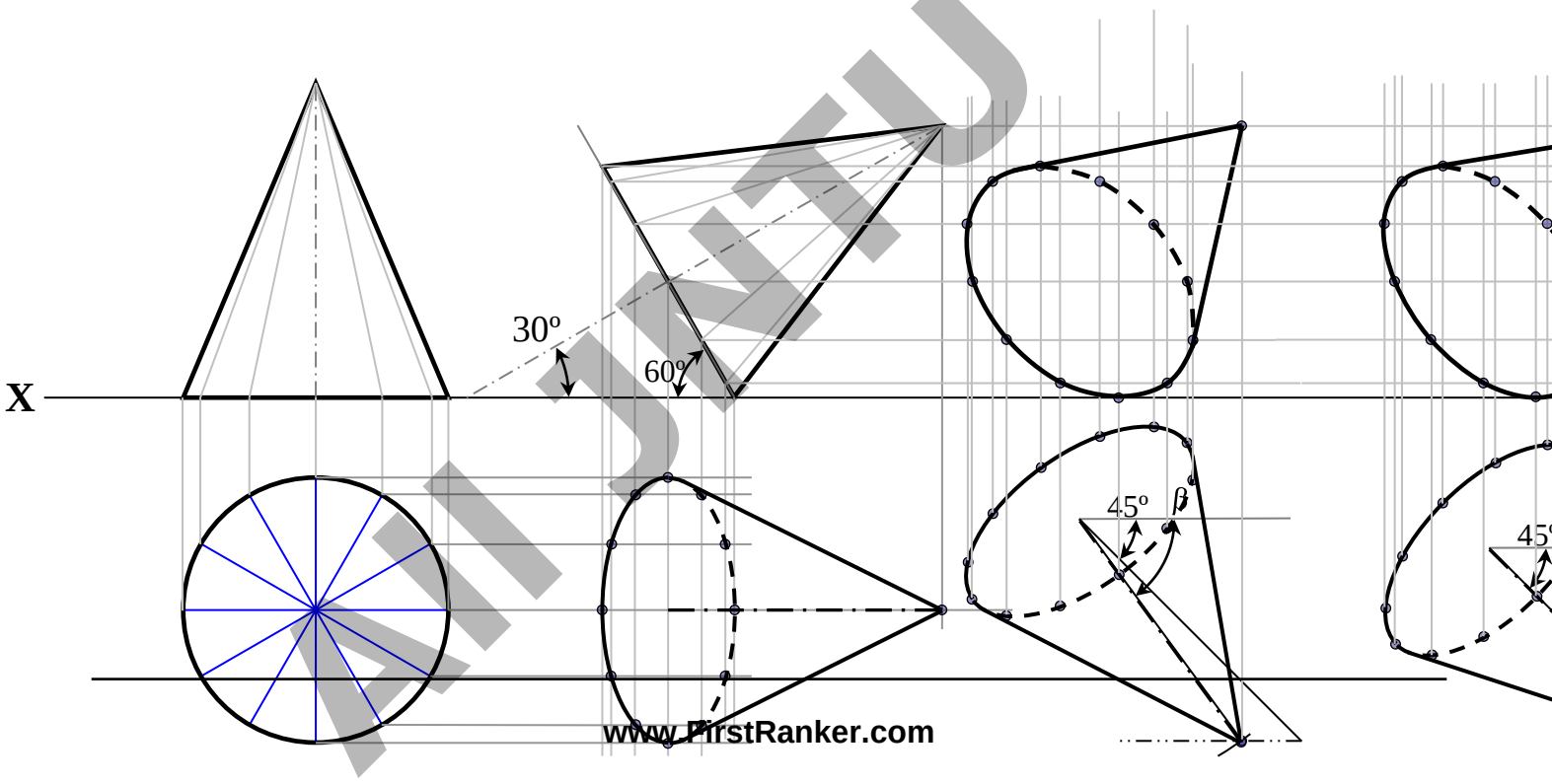

All JNTU World
www.FirstRanker.com

FirstRanker.com
Firstranker's choice
www.FirstRanker.com www.FirstRanker.com

Q13.22: A hexagonal pyramid base 25 mm side and axis 55 mm long has one of its slant edge on the containing that edge and the axis is perpendicular to the H.P. and inclined at 45° to the V.P. Draw it the apex is nearer to the V.P. than the base.

The inclination of the axis is given indirectly in this problem. When the slant edge of a pyramid rests on t inclined with the HP so while deciding first view the axis of the solid must be kept perpendicular to HP i. base will be seen in the TV. Secondly when drawing hexagon in the TV we have to keep the corners at th

The vertical plane containing the slant edge on the HP and the axis is seen in the TV as o_1d_1 for drawing an auxiliary plane X_1Y_1 at 45° from d_1o_1 extended. Then draw projectors from each point i.e. a_1 to f_1 per and mark the points measuring their distances in the FV from old XY line.

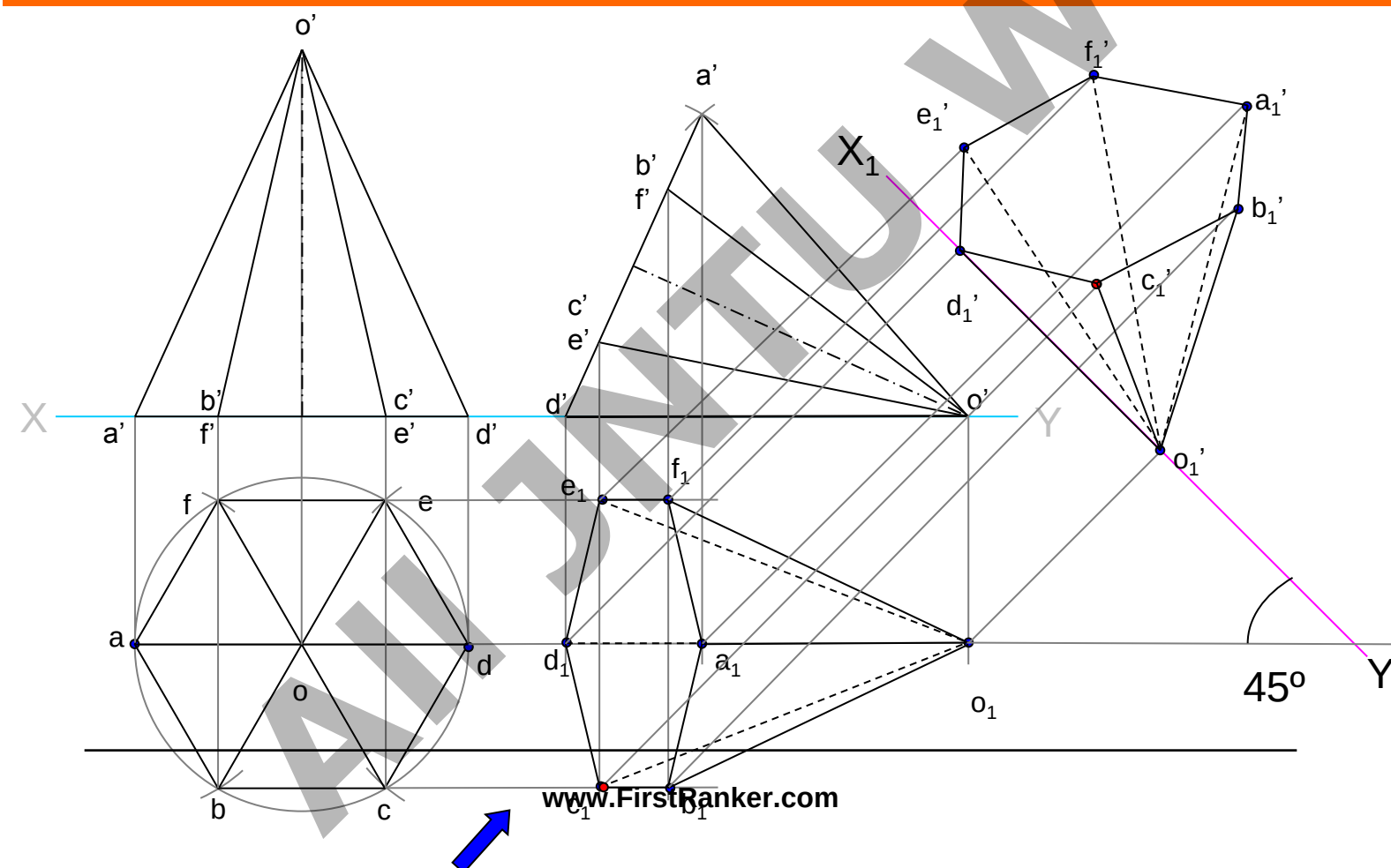

www.FirstRanker.com
All JNTU World

FirstRanker.com
Firstranker's choice
www.FirstRanker.com www.FirstRanker.com

Problem 5: A cube of 50 mm long edges is so placed on HP on one corner that a body diagonal is parallel to HP and perpendicular to VP Draw it's projections.

Solution Steps:

1.Assuming standing on HP, begin with TV,a square with all sides equally inclined to XY. Project FV and name all points of FV & TV.
2.Draw a body-diagonal joining c' with 1'(This can become // to xy)
3.From 3' drop a perpendicular on this and name it p'
4.Draw 2nd Fv in which 3'p' line is vertical ***means*** c'-1' diagonal must be horizontal. .Now as usual project TV..
6.In final TV draw same diagonal is perpendicular to VP as said in pr
Then as usual project final FV.

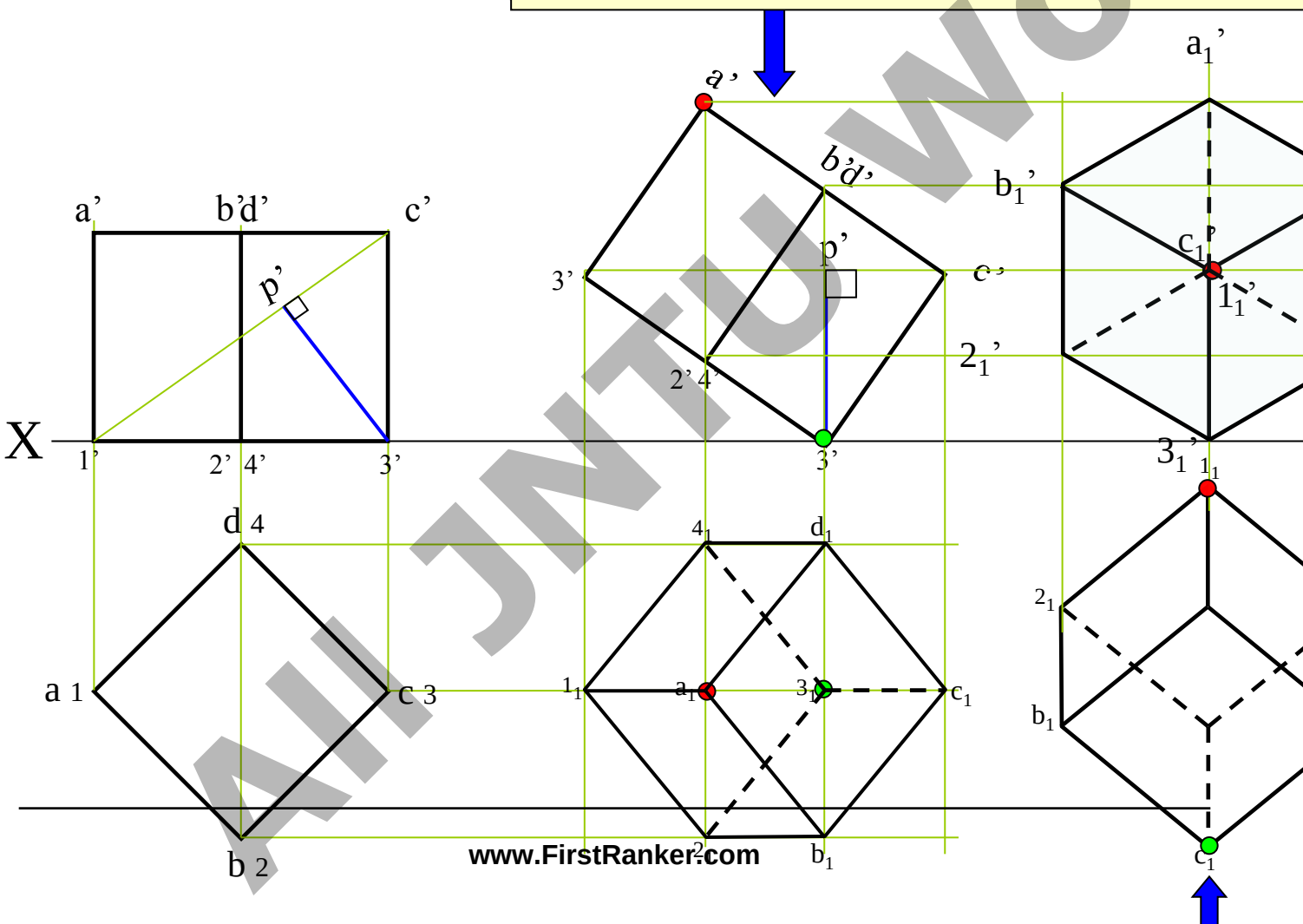

All JNTU World

www.FirstRanker.com

Problem 6: A tetrahedron of 50 mm long edges is resting on one edge on Hp while one triangular face containing this edge is vertical and 45^0 inclined to Vp. Draw projections.

IMPORTANT:
Tetrahedron is a special type of triangular pyramid in which base sides & slant edges are equal in length. Solid of four faces. Like cube it is also described by One dimension only.. Axis length generally not given.

Solution Steps

As it is resting assume it standing on Hp.
Begin with Tv , an equilateral triangle as si
First project base points of Fv on xy, name
From a' with TL of edge, 50 mm, cut on axi
(as axis is not known, o' is finalized by slant
Then complete Fv.
In 2nd Fv make face o'b'c' vertical as said in
And like all previous problems solve compl

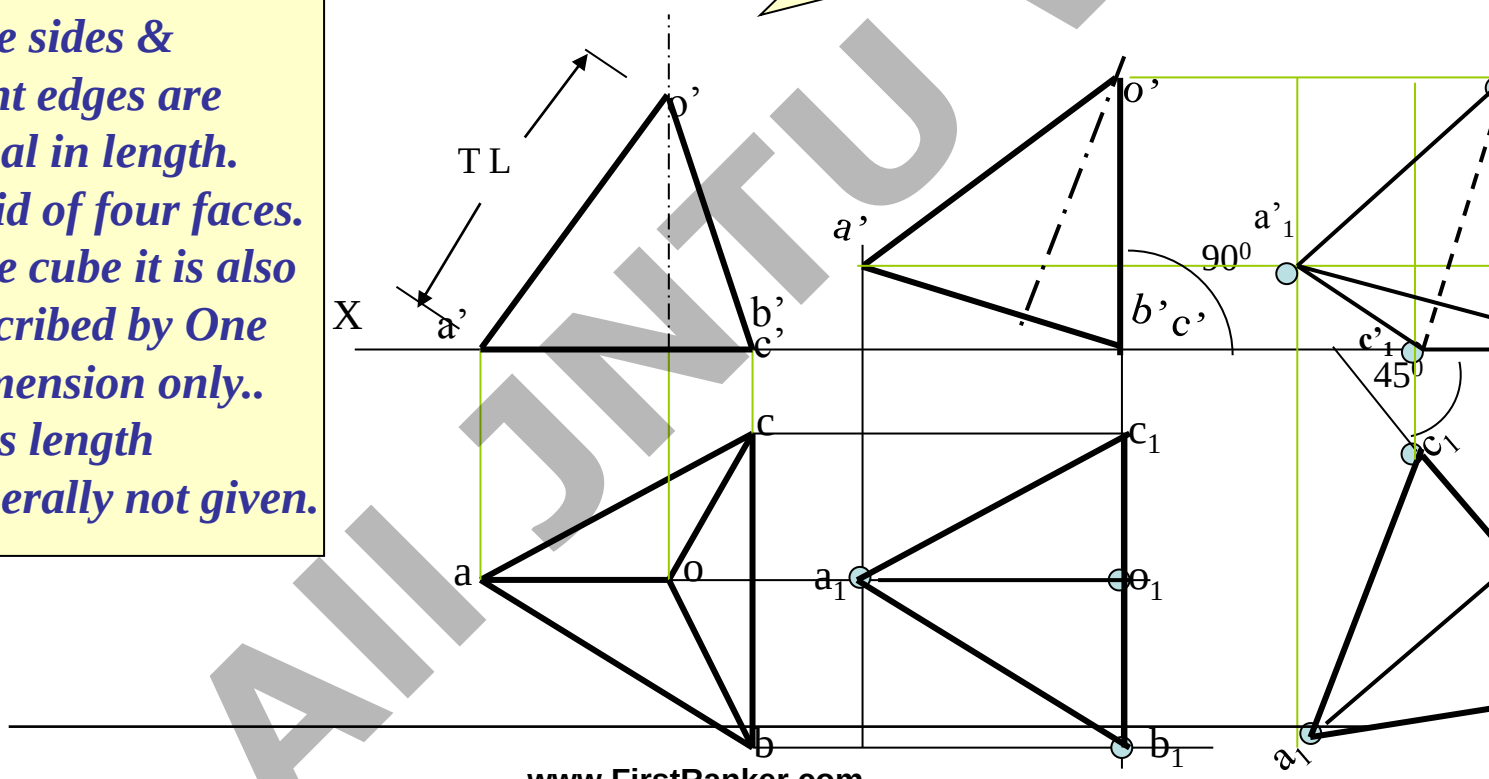

All JNTU World

FirstRanker.com
Firstranker's choice
www.FirstRanker.com www.FirstRanker.com

Problem 1. A square pyramid, 40 mm base sides and axis 60 mm long, has a triangular face on the ground and the vertical plane containing the axis makes an angle of 45^0 with the VP. Draw its projections. Take apex nearer to VP

Solution Steps :

Triangular face on Hp , means it is lying on Hp:

1.Assume it standing on Hp.

2.It's Tv will show True Shape of base(square)

3.Draw square of 40mm sides with one side vertical T taking 50 mm axis project Fv. (a triangle)

4.Name all points as shown in illustration.

5.Draw 2nd Fv in lying position I.e.o'c'd' face on xy. An

6.Make visible lines dark and hidden dotted, as per th

7.Then construct remaining inclination with Vp (Vp containing axis ic the center line of 2nd Tv.Make shown take apex near to xy, as it is nearer to Vp) &

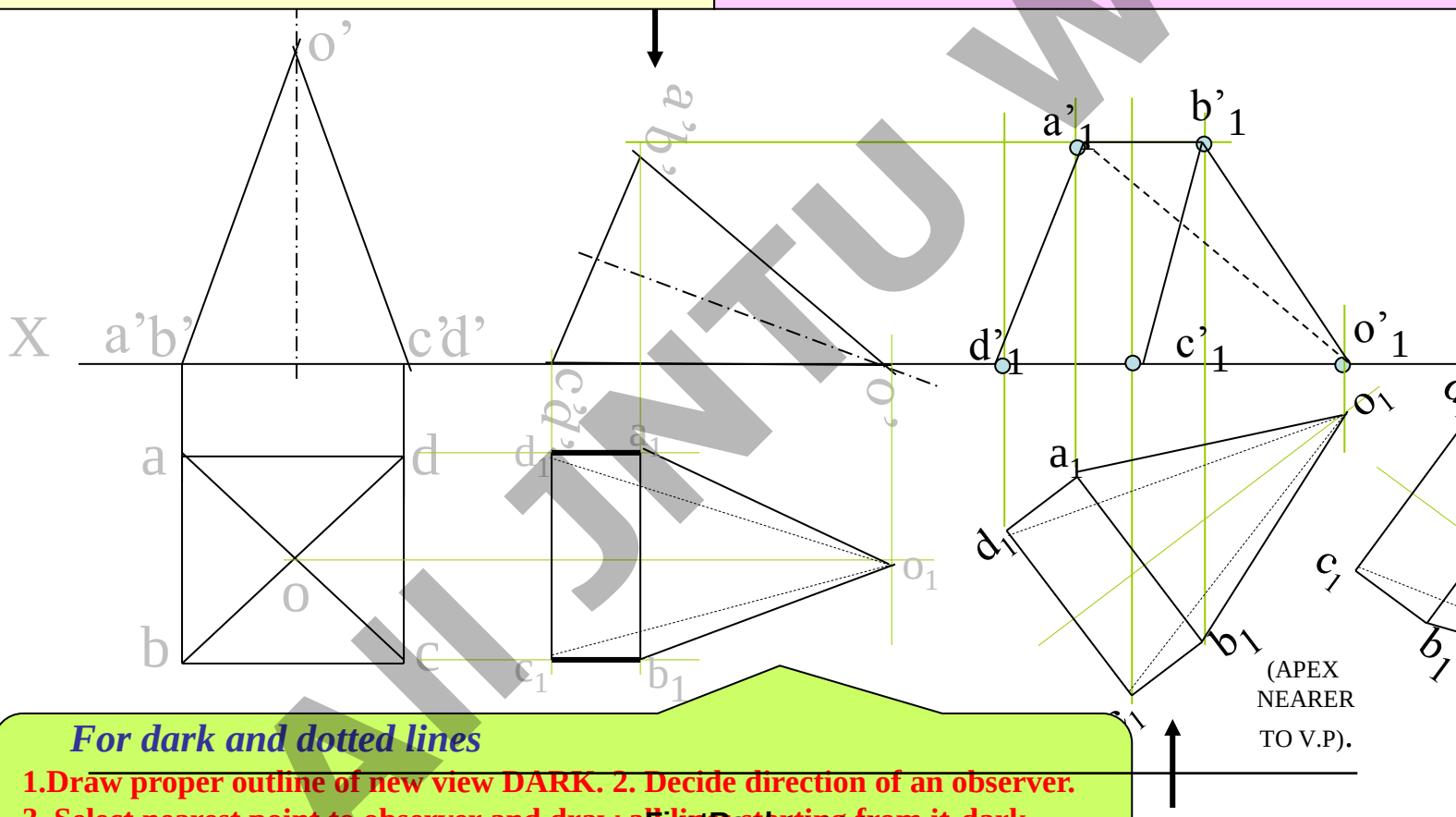

For dark and dotted lines

1.Draw proper outline of new view DARK. 2. Decide direction of an observer.
3. Select nearest point to observer and draw all lines starting from it-dark.
4. Select farthest point to observer and draw all lines (remaining)from it- dotted.

www.FirstRanker.com
All JNTU World

FirstRanker.com
Firstranker's choice
www.FirstRanker.com www.FirstRanker.com

Problem 13.20:A pentagonal pyramid base 25 mm side and axis 50 mm long has c
triangular faces in the VP and the edge of the base contained by that face makes a
with the HP. Draw its projections.

Step 1. Here the inclination of the axis is given indirectly. As one triangular face of the pyramid is in the V
inclined with the VP. So for drawing the first view keep the axis perpendicular to the VP. So the true shap
seen in the FV. Secondly when drawing true shape of the base in the FV, one edge of the base (which is to
the HP) must be kept perpendicular to the HP.

Step 2. In the TV side aeo represents a triangular face. So for drawing the TV in the second stage, keep th
that the triangular face will lie on the VP and reproduce the TV. Then draw the new FV with help of TV

Step 3. Now the edge of the base $a_1'e_1'$ which is perpendicular to the HP must be in clined at 30º to the HP
FV till a1'e1' is inclined at 30º with the HP. Then draw the TV.

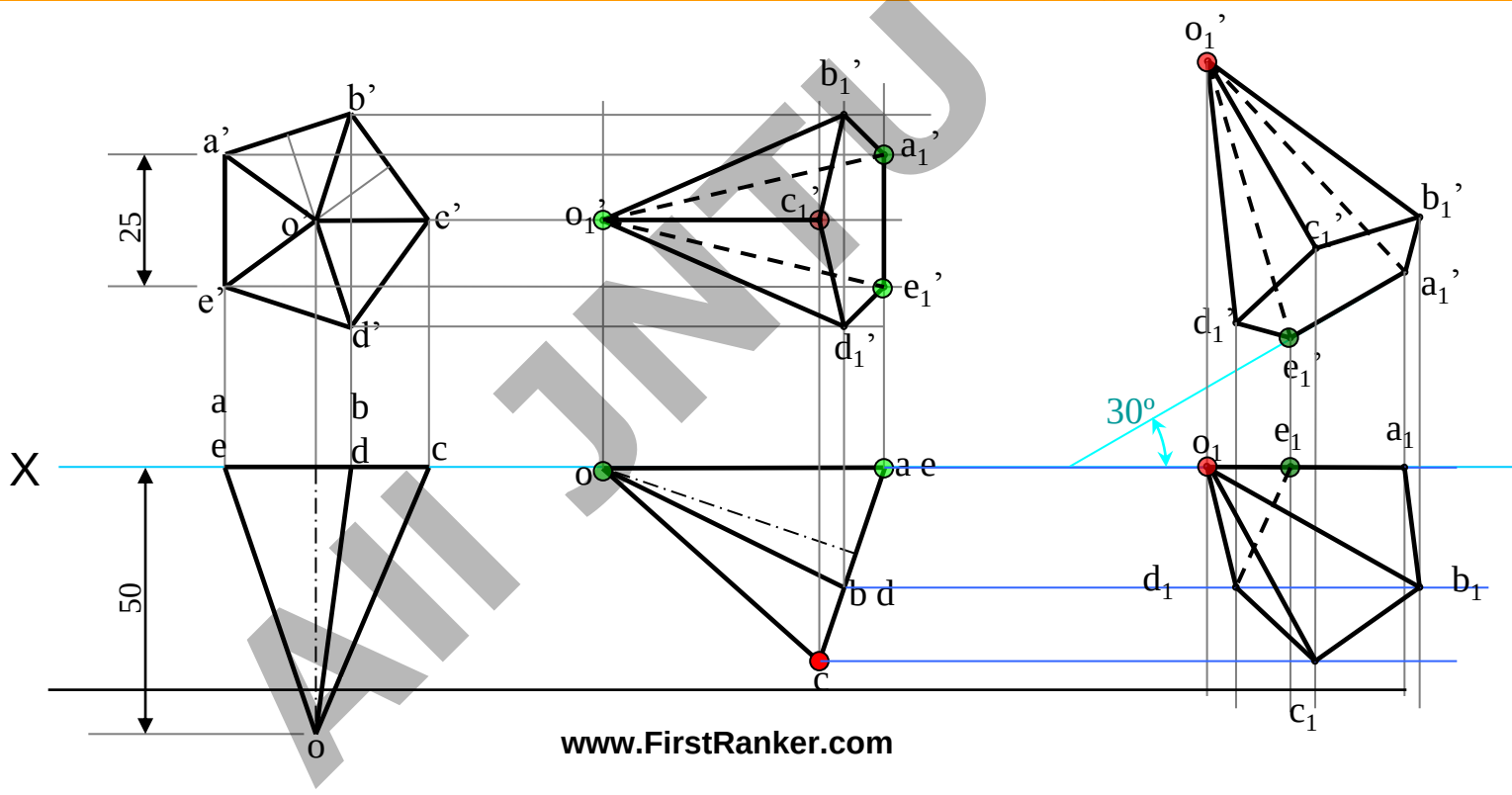

All JNTU World

www.FirstRanker.com

FirstRanker.com
Firstranker's choice
www.FirstRanker.com www.FirstRanker.com

Problem 2:

A cone 40 mm diameter and 50 mm axis is resting on one generator on Hp which makes 30^0 inclination with VP Draw it's projections.

For dark and dotted lines

1. **Draw proper outline of new vie DARK.**
2. **Decide direction of an observer.**
3. **Select nearest point to observer and draw all lines starting from it-dark.**
4. **Select farthest point to observer and draw all lines (remaining) from it- dotted.**

Solution Steps:

Resting on Hp on one generator, me
1.Assume it standing on Hp.
2.It's Tv will show True Shape of ba
3.Draw 40mm dia. Circle as Tv & taking 50 mm axis project Fv. (a
4.Name all points as shown in illustr
5.Draw 2nd Fv in lying position I.e.o'
project it's Tv below xy.
6.Make visible lines dark and hidder as per the procedure.
7.Then construct remaining inclinati (generator o_1e_1 30^0 to xy as shown

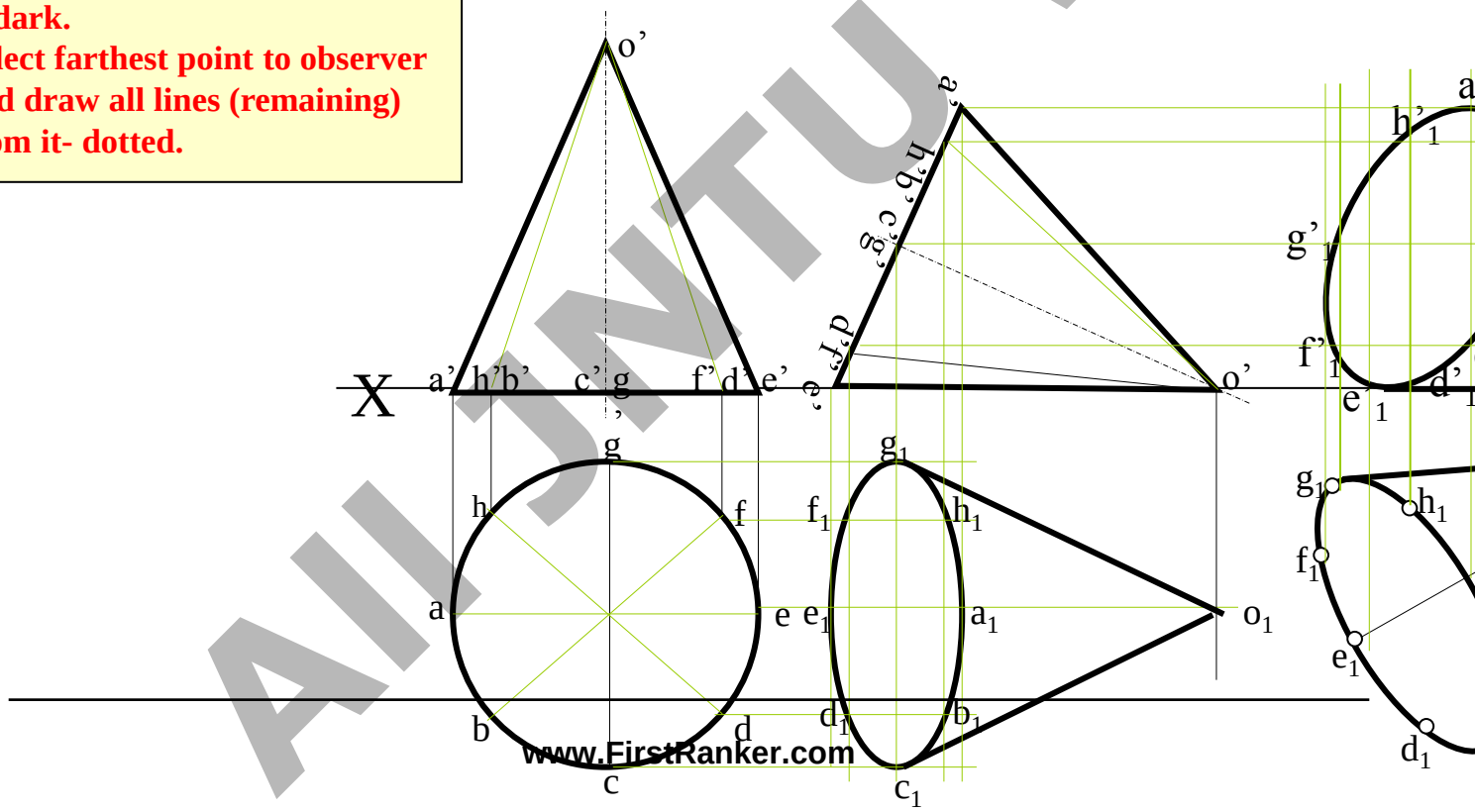

www.FirstRanker.com
All JNTU world

FirstRanker.com
Firstranker's choice
www.FirstRanker.com www.FirstRanker.com

Problem 3:

A cylinder 40 mm diameter and 50 mm axis is resting on one point of a base circle on Vp while it's axis makes 45^0 with Vp and Fv of the axis 35^0 with Hp. Draw projections..

Solution Steps:

Resting on Vp on one point of base, means incli
1.Assume it standing on Vp
2.It's Fv will show True Shape of base & top(cir
3.Draw 40mm dia. Circle as Fv & taking 50 mm
(a Rectangle)
4.Name all points as shown in illustration.
5.Draw 2nd Tv making axis 45^0 to xy And project
6.Make visible lines dark and hidden dotted, as
7.Then construct remaining inclination with Hp
(Fv of axis I.e. center line of view to xy as show

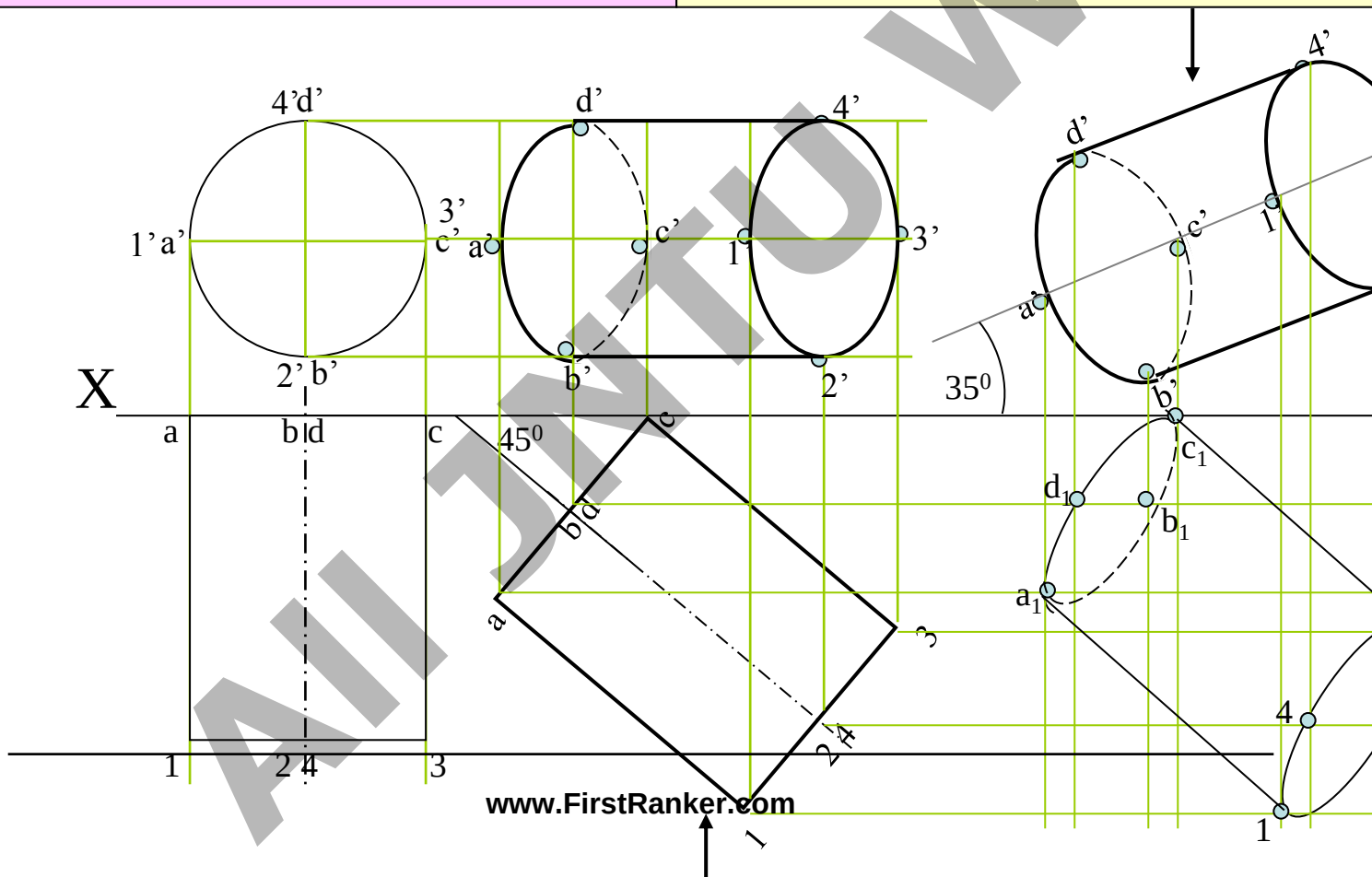

All JNTU World

www.FirstRanker.com

FirstRanker.com
Firstranker's choice
www.FirstRanker.com www.FirstRanker.com

Problem 4: A square pyramid 30 mm base side and 50 mm long axis is resting on it's apex on Hp, such that it's one slant edge is vertical and a triangular face through it is perpendicular to Vp. Draw it's projections.

Solution Steps :

1. Assume it standing on Hp but as said on apex.
2. It's Tv will show True Shape of base(square)
3. Draw a corner case square of 30 mm sides as Showing all slant edges dotted, as those will not
4. taking 50 mm axis project Fv. (a triangle)
5. Name all points as shown in illustration.
6. Draw 2nd Fv keeping o'a' slant edge vertical & p
7. Make visible lines dark and hidden dotted, as p
8. Then redrew 2nd Tv as final Tv keeping $a_1o_1d_1$ perpendicular to Vp i.e.xy. Then as usual proje

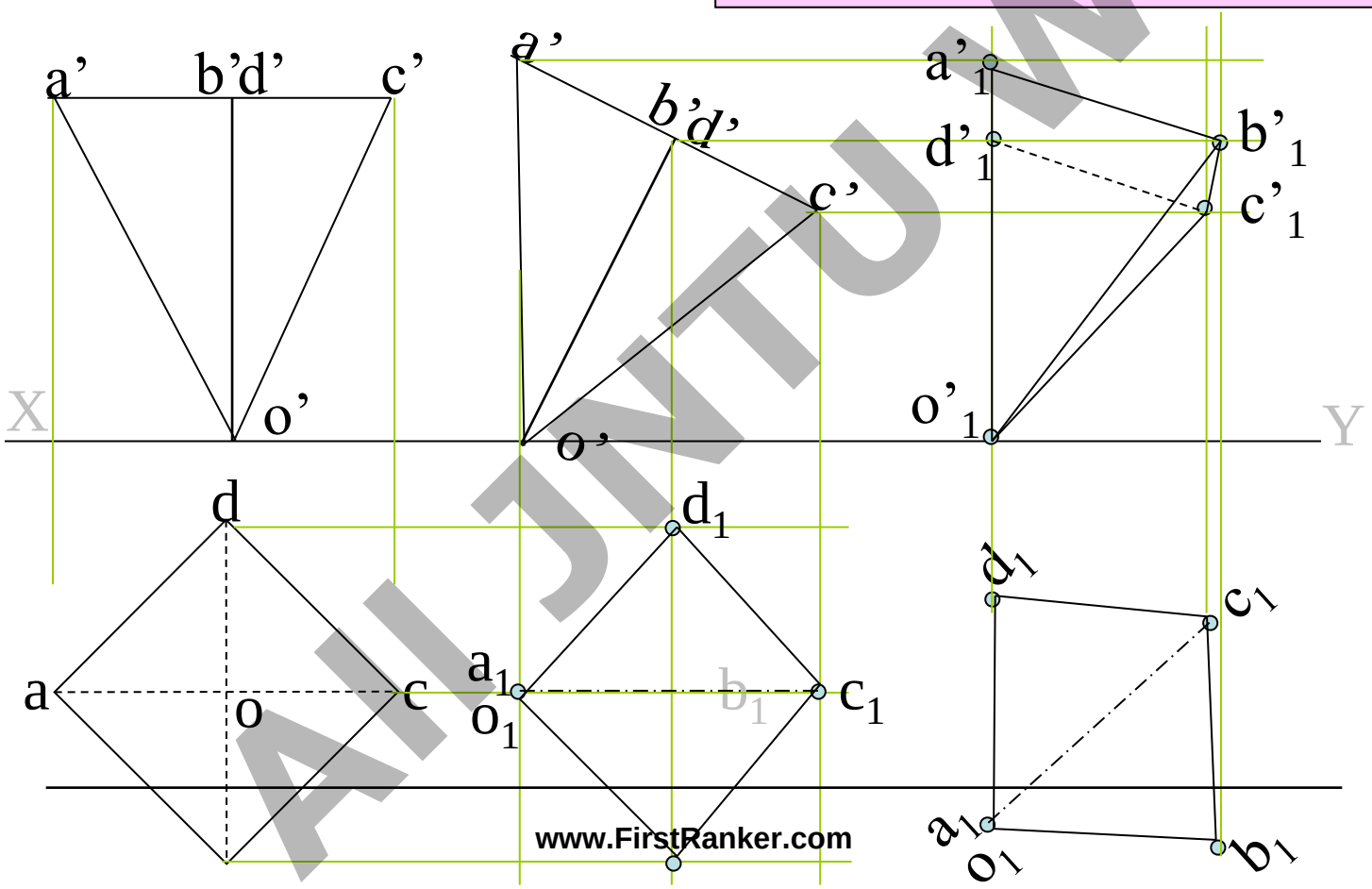

All JNTU World
www.FirstRanker.com

FirstRanker.com
Firstranker's choice

FREELY SUSPENDED SOLIDS:

Positions of CG, on axis, from base, for different solids are shown bel

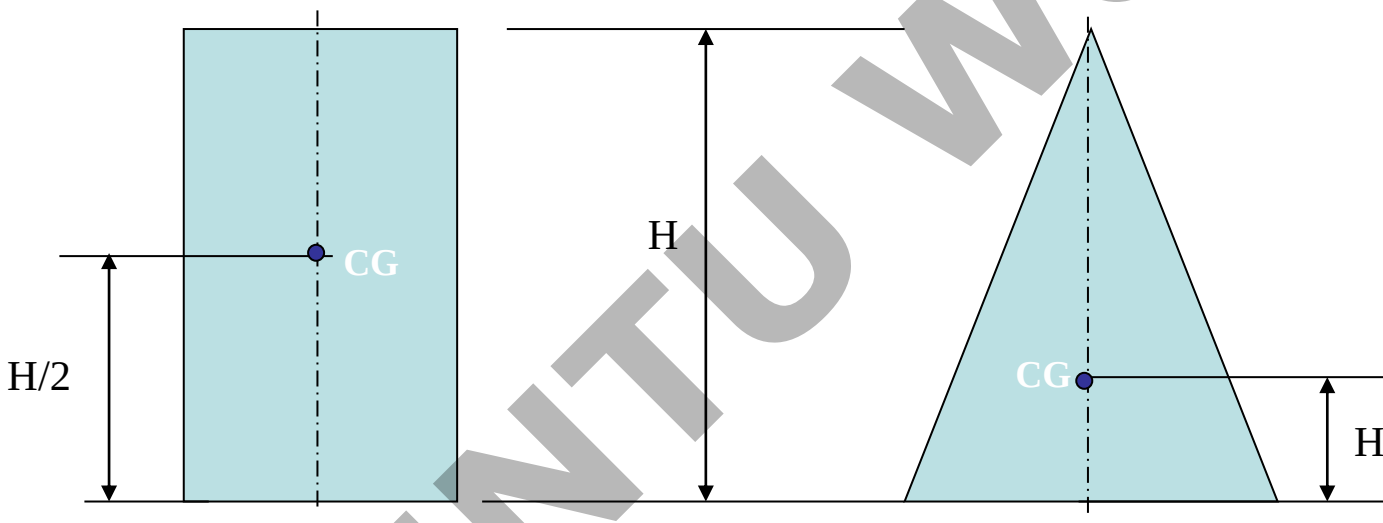

GROUP A SOLIDS
(Cylinder & Prisms)

GROUP B SOLIDS
(Cone & Pyramids)

All JNTU World

Problem 7: A pentagonal pyramid 30 mm base sides & 60 mm long axis, is freely suspended from one corner of base so that a plane containing it's axis remains parallel to Vp.
Draw it's three views.

Solution Steps:

In all suspended cases axis shows inclination with Hp.

1.Hence assuming it standing on Hp, drew Tv - a regular p

2.Project Fv & locate CG position on axis – (¼ H from ba
Join it with corner d'

3.As 2nd Fv, redraw first keeping line g'd' vertical.

4.As usual project corresponding Tv and then Side View lo

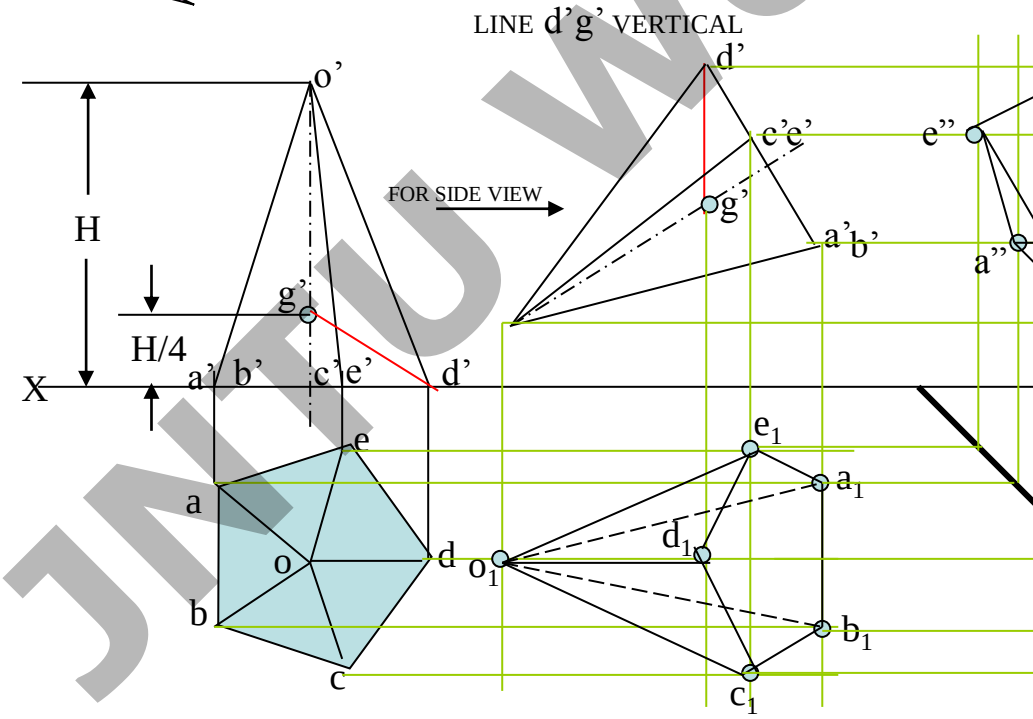

IMPORTANT:
When a solid is freely suspended from a corner, then line joining point of contact & C.G. remains vertical.
(Here axis shows inclination with Hp.)
So in all such cases, assume solid standing on Hp initially.)

All JNTU World

FirstRanker.com
Firstranker's choice
www.FirstRanker.com www.FirstRanker.com

Solution Steps:

1.Assuming it standing on Hp begin with Tv, a square of corner case.
2.Project corresponding Fv.& name all points as usual in both views.
3.Join a'1' as body diagonal and draw 2nd Fv making it vertical (I' on xy)
4.Project it's Tv drawing dark and dotted lines as per the procedure.
5.With standard method construct Left-hand side view.

(Draw a 45⁰ inclined Line in Tv region (below xy). Project horizontally all points of Tv on this line and reflect vertically upward, above xy.After this, draw horizontal lines, from all points of Fv, to meet these lines. Name points of intersections and join properly. For dark & dotted lines locate observer on left side of Fv as shown.)

Problem 8:

A cube of 50 mm long ed on Hp on one corner th through this corner is p and parallel to Vp Draw

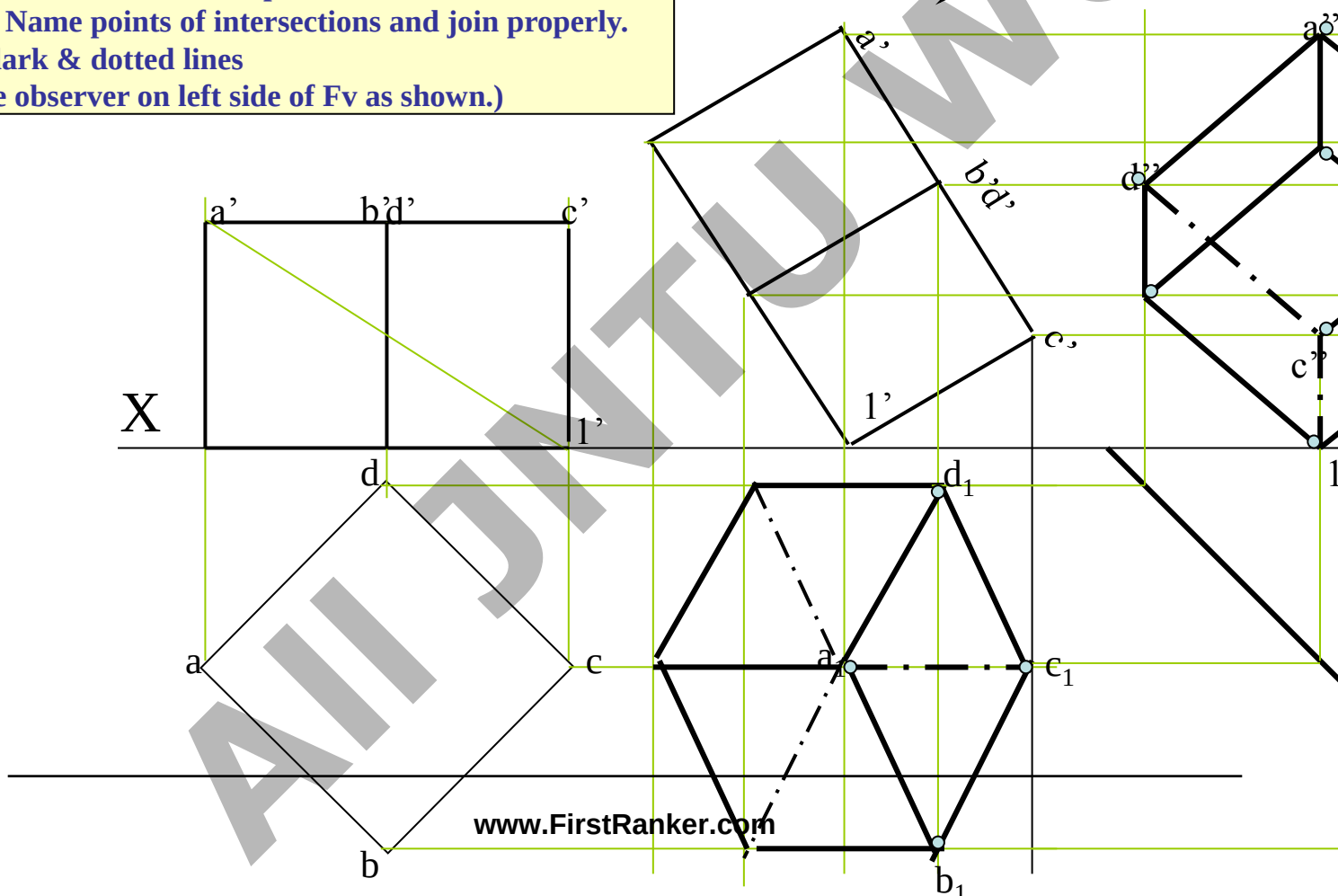

AII JNTU World
www.FirstRanker.com

Problem 9: A right circular cone, 40 mm base diameter and 60 mm long axis is resting on Hp on one point of base circle such that it's axis makes 45^0 inclination with Hp and 40^0 inclination with Vp. Draw it's projections.

This case resembles to **problem no.7 & 9 from projections of**
In previous all cases 2nd inclination was done by a parameter not
Tv of axis is inclined to Vp etc. But here it is clearly said that the a
to Vp. Means here TL inclination is expected. So the same construc
Problems is done here also. See carefully the final Tv and inclina
So assuming it standing on HP begin as usual.

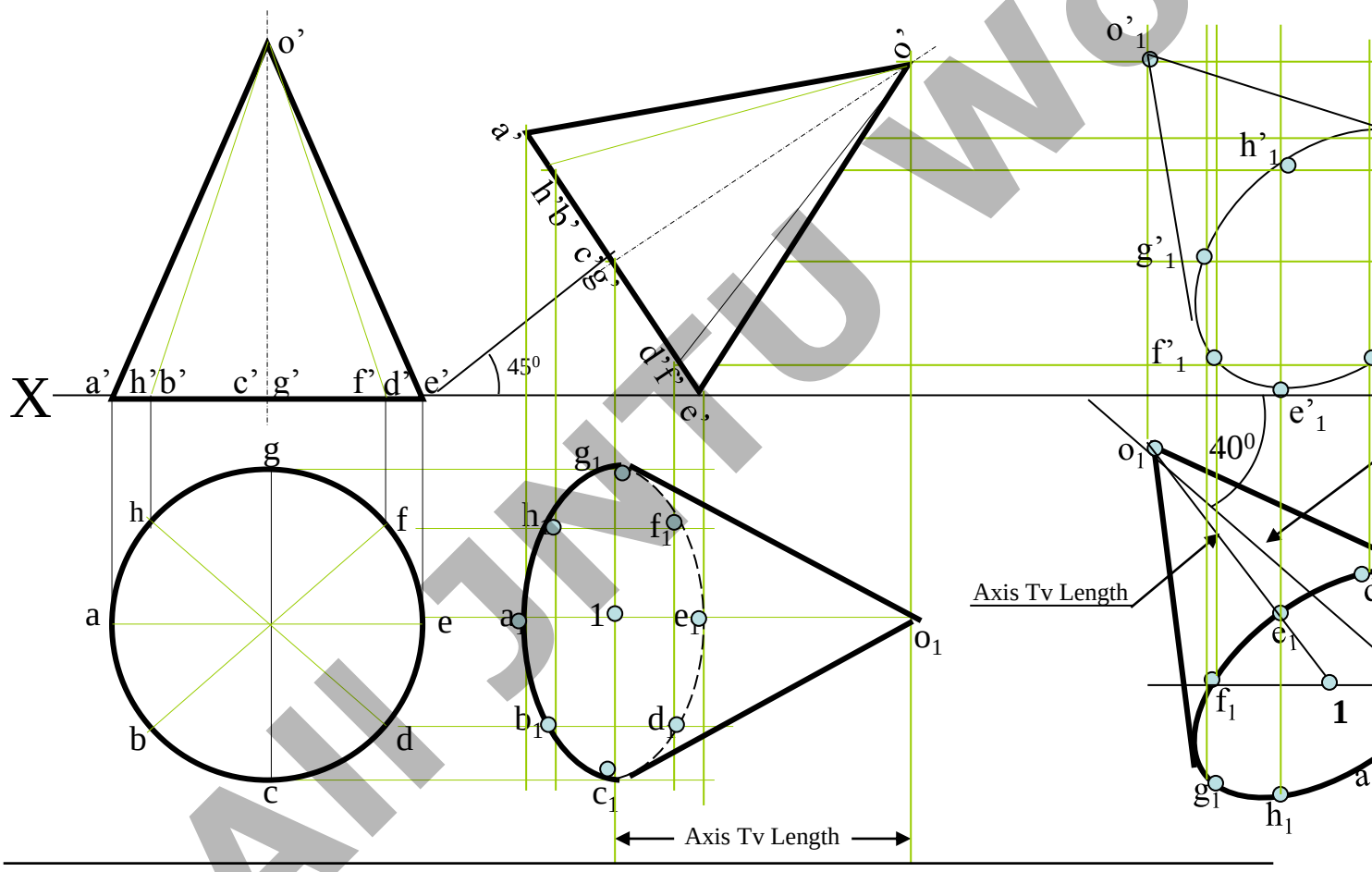

All JNTU World

Problem 10: A triangular prism, 40 mm base side 60 mm axis is lying on Hp on one rectangular face with axis perpendicular to Vp. One square pyramid is leaning on it's face centrally with axis // to vp. It's base side is 30 mm & axis is 60 mm long resting on Hp on one edge of base.Draw FV & TV of both solids.Project another FV on an AVP 45^0 inclined to VP.

Steps :
Draw Fv of lying prism (an equilateral Triangle)
And Fv of a leaning pyramid.
Project Tv of both solids.
Draw x_1y_1 45^0 inclined to xy and project aux.Fv on it.
Mark the distances of first FV from first xy for the distances of aux. Fv from x_1y_1 line.
Note the observer's directions Shown by arrows and further steps carefully.

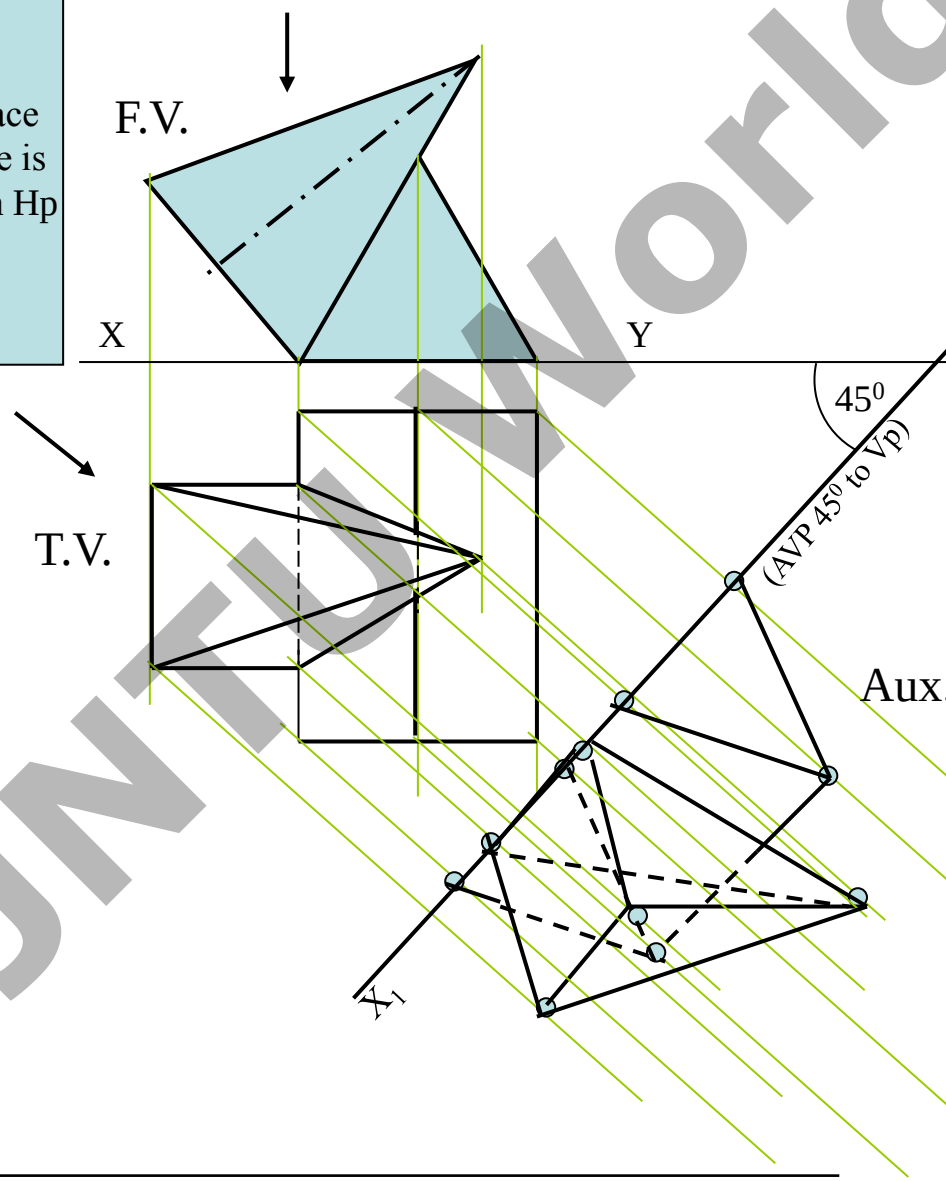

All JNTU World

Problem 11: A hexagonal prism of base side 30 mm longand axis 40 mm long, is standing on Hp on it's base with one base edge // to Vp.
A tetrahedron is placed centrally on the top of it.The base of tetrahedron is a triangle formed by joining alternate corners of top of prism..Draw projections of both solids.
Project an auxiliary Tv on AIP 45^0 inclined to Hp.

STEPS:
Draw a regular hexagon as Tv of standing prism With one side // to xy and name the top points.Project it's Fv – a rectangle and name it's top.
Now join it's alternate corners a-c-e and the triangle formed is base of a tetrahedron as said.
Locate center of this triangle & locate apex o
Extending it's axis line upward mark apex o'
By cutting TL of edge of tetrahedron equal to a-c. and complete Fv of tetrahedron.
Draw an AIP (x1y1) 45^0 inclined to xy
And project Aux.Tv on it by using similar Steps like previous problem.

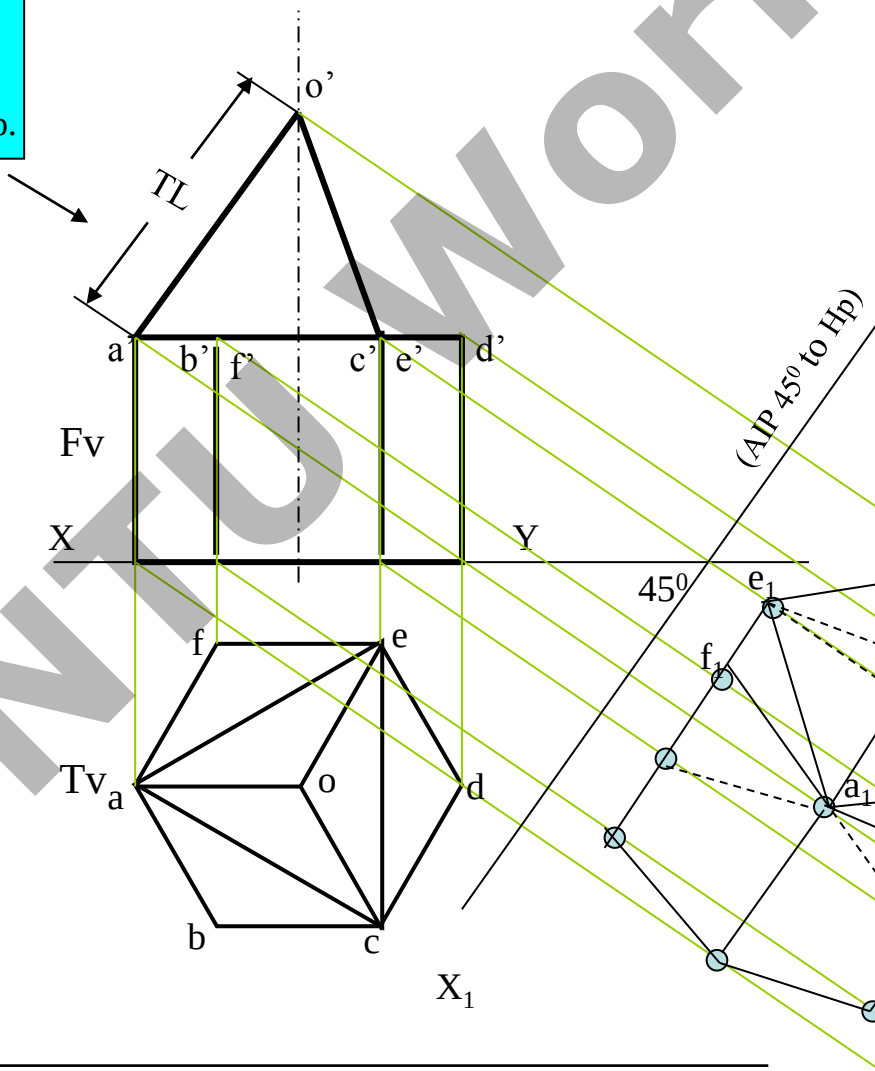

All JNTU World

Problem 12: A frustum of regular hexagonal pyrami is standing on it's larger base On Hp with one base side perpendicular to Vp.Draw it's Fv & Tv.
Project it's Aux.Tv on an AIP parallel to one of the slant edges showing TL.
Base side is 50 mm long , top side is 30 mm long and 50 mm is height of frustum.

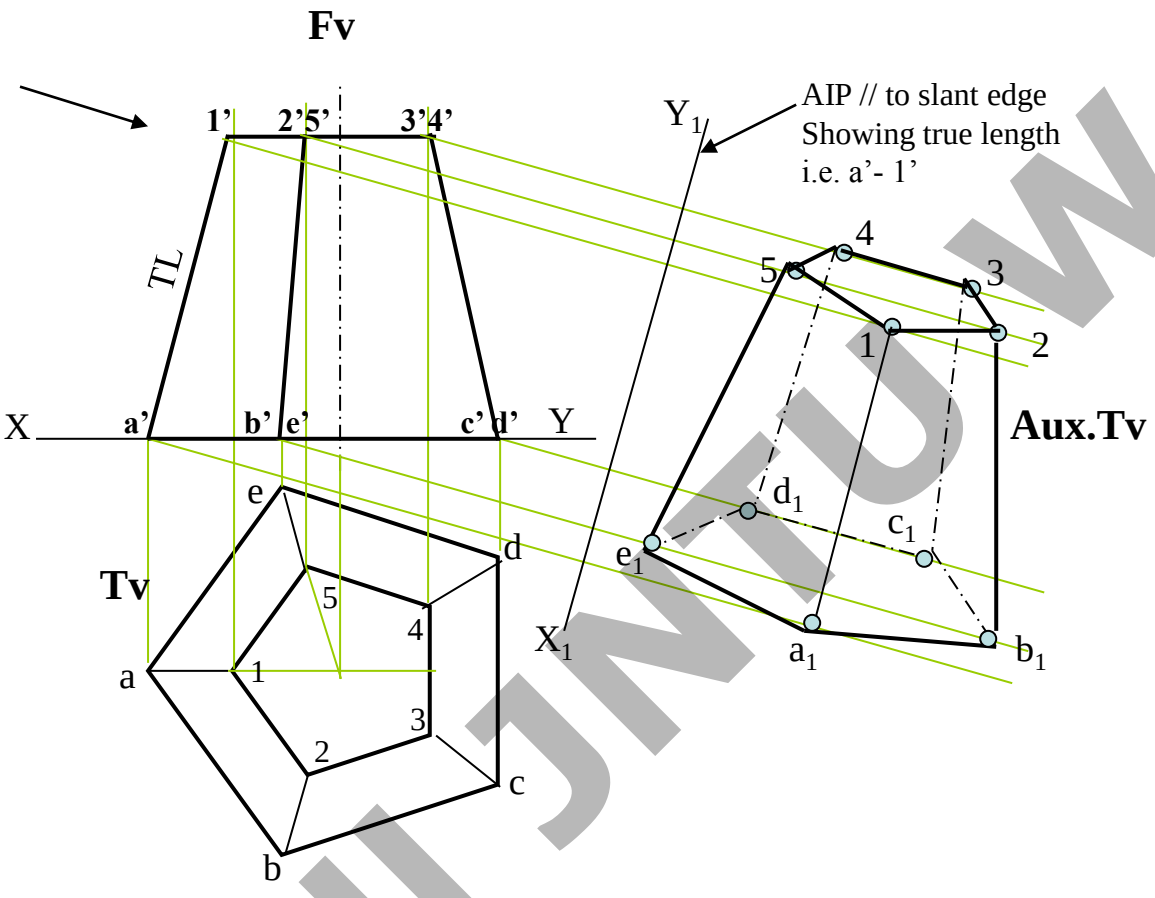

All JNTU World

FirstRanker.com
Firstranker's choice

UNIT IV

All JNTU World

FirstRanker.com
Firstranker's choice
www.FirstRanker.com www.FirstRanker.com

DEVELOPMENT OF SURFACES OF SOLIDS.

MEANING:-

ASSUME OBJECT HOLLOW AND MADE-UP OF THIN SHEET. CUT OPEN IT FROM ON
UNFOLD THE SHEET COMPLETELY. THEN THE SHAPE OF THAT UNFOLDED SHEET
DEVELOPMENT OF LATERLAL SUEFACES OF THAT OBJECT OR SOLID.

LATERLAL SURFACE IS THE SURFACE EXCLUDING SOLID'S TOP & BASE.

ENGINEERING APLICATION:

THERE ARE SO MANY PRODUCTS OR OBJECTS WHICH ARE DIFFICULT TO MANUF
CONVENTIONAL MANUFACTURING PROCESSES, BECAUSE OF THEIR SHAPES AND
THOSE ARE FABRICATED IN SHEET METAL INDUSTRY BY USING
DEVELOPMENT TECHNIQUE. THERE IS A VAST RANGE OF SUCH OBJECTS.

EXAMPLES:-

Boiler Shells & chimneys, Pressure Vessels, Shovels, Trays, Boxes & Cartons, Feeding Hoppers
Large Pipe sections, Body & Parts of automotives, Ships, Aeroplanes and many more.

WHAT IS OUR OBJECTIVE IN THIS TOPIC ?

To learn methods of development of surfaces of different solids, their sections and frustums.

But before going ahead, note following ***Important*** *points.*

1. Development is different drawing than PROJECTIONS.
2. It is a shape showing AREA, means it's a 2-D plain draw
3. Hence all dimensions of it must be TRUE dimensions.
4. As it is representing shape of an un-folded sheet, no edge
   And hence DOTTED LINES are never shown on develo

Study illustrations given on next page carefully.

www.FirstRanker.com
All JNTU World

FirstRanker.com
Firstranker's choice
www.FirstRanker.com www.FirstRanker.com

Development of lateral surfaces of different solids.
(Lateral surface is the surface excluding top & base)

Cylinder: A Rectangle

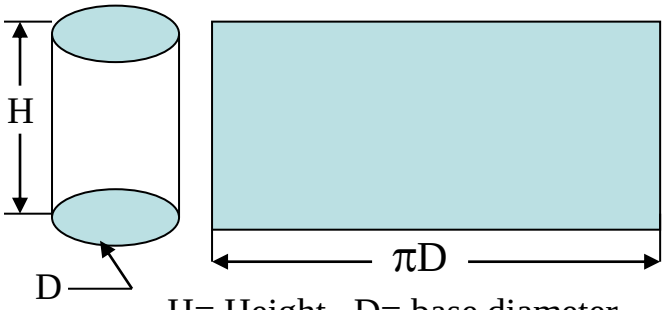

H= Height D= base diameter

Cone: (Sector of circle)

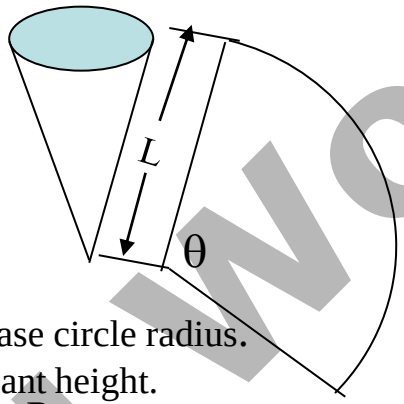

R=Base circle radius.
L=Slant height.

$$\theta = \frac{R}{L} \times 360^0$$

Pyramids: (

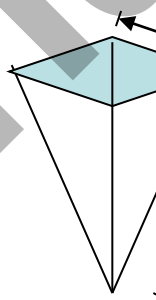

L= Slant e
S = Edge o

Prisms: No.of Rectangles

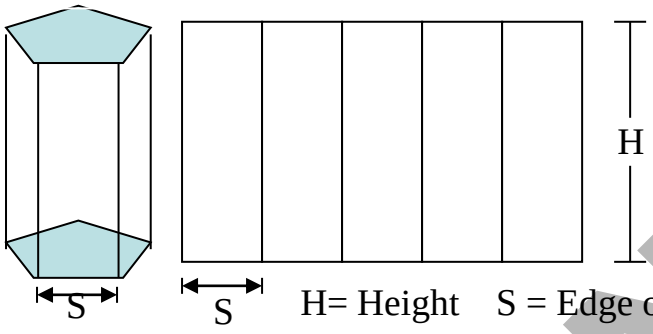

H= Height S = Edge of base

Cube: Six Squares.

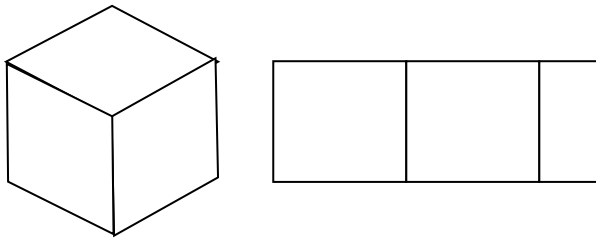

Tetrahedron: Four Equilateral Triangles

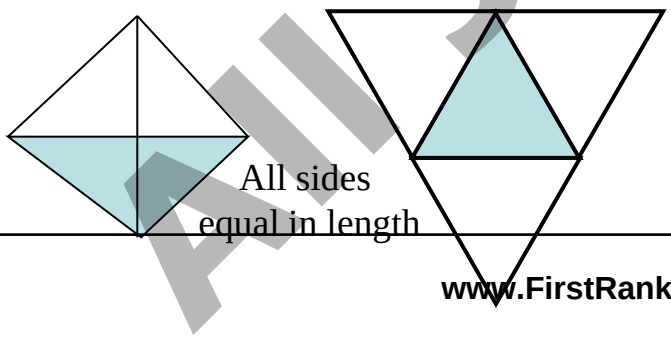

All sides
equal in length

AllJNTU World

www.FirstRanker.com

FRUSTUMS

DEVELOPMENT OF
FRUSTUM OF CONE

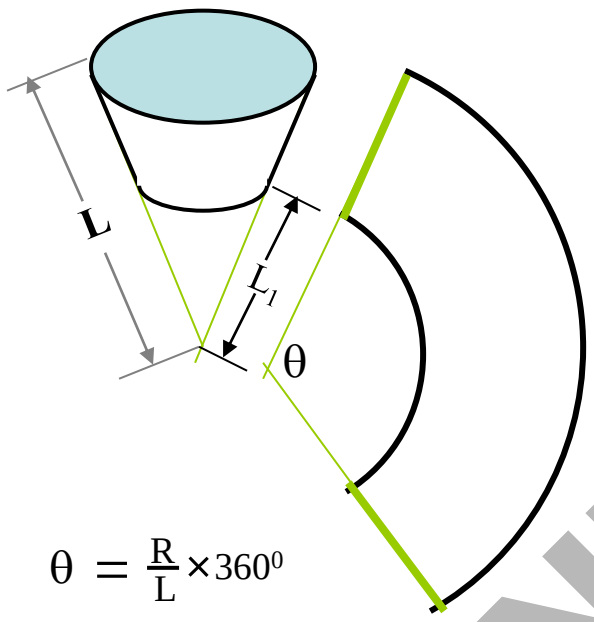

$$\theta = \frac{R}{L} \times 360^0$$

R= Base circle radius of cone
L= Slant height of cone
L_1 = Slant height of cut part.

DEVELOPMENT OF
FRUSTUM OF SQUARE PYRAM

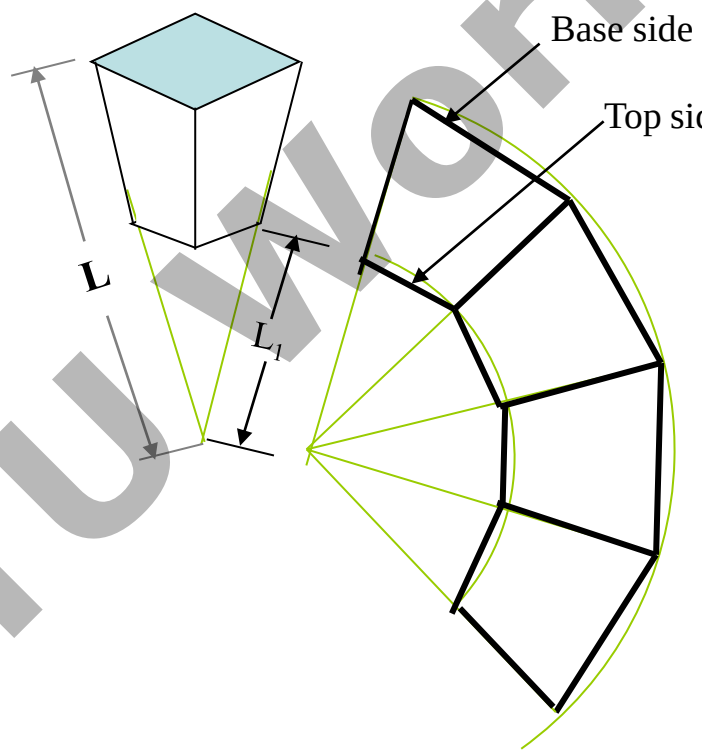

L= Slant edge of pyramid
L_1 = Slant edge of cut part.

All JNTU World

STUDY NEXT *NINE* PROBLEMS
SECTIONS & DEVELOPMENT

Problem 7: Draw a semicircle 0f 100 mm diameter and inscribe in it a largest **rhombus**. If the semicircle is development of a cone and rhombus is some curve on it, then draw the projections of cone showing that curve.

TO DRA
VIEWS
DEVE

Sol
Simi

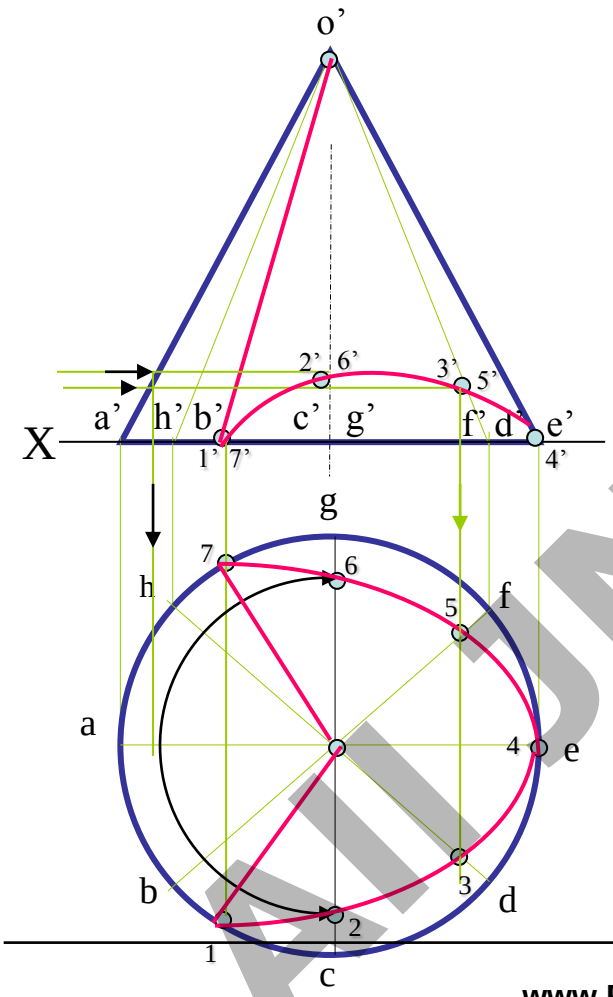

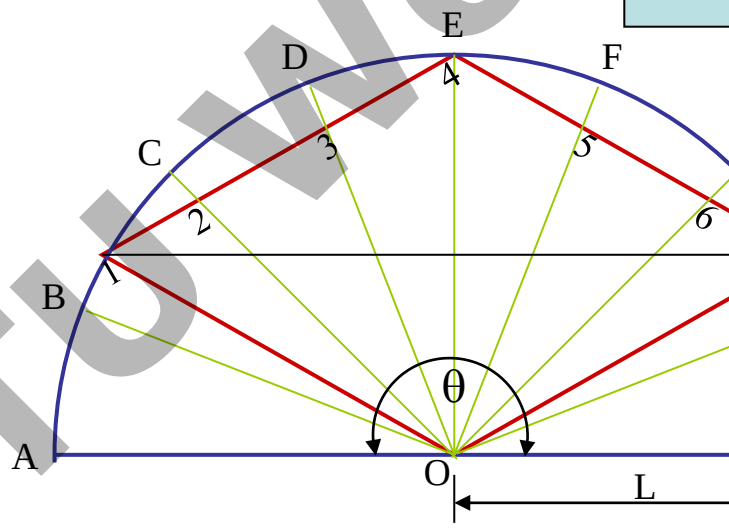

R=Base circle radius.
L=Slant height.

$$\theta = \frac{R}{L} \times 360^0$$

All JNTU World

Problem 8: A half cone of 50 mm base diameter, 70 mm axis, is standing on it's half base on HP with it parallel and nearer to VP.An inextensible string is wound round it's surface from one point of base circl brought back to the same point.If the string is of ***shortest length***, find it and show it on the projections o

TO DRAW A CURVE ON PRINCIPAL VIEWS FROM DEVELOPMENT.

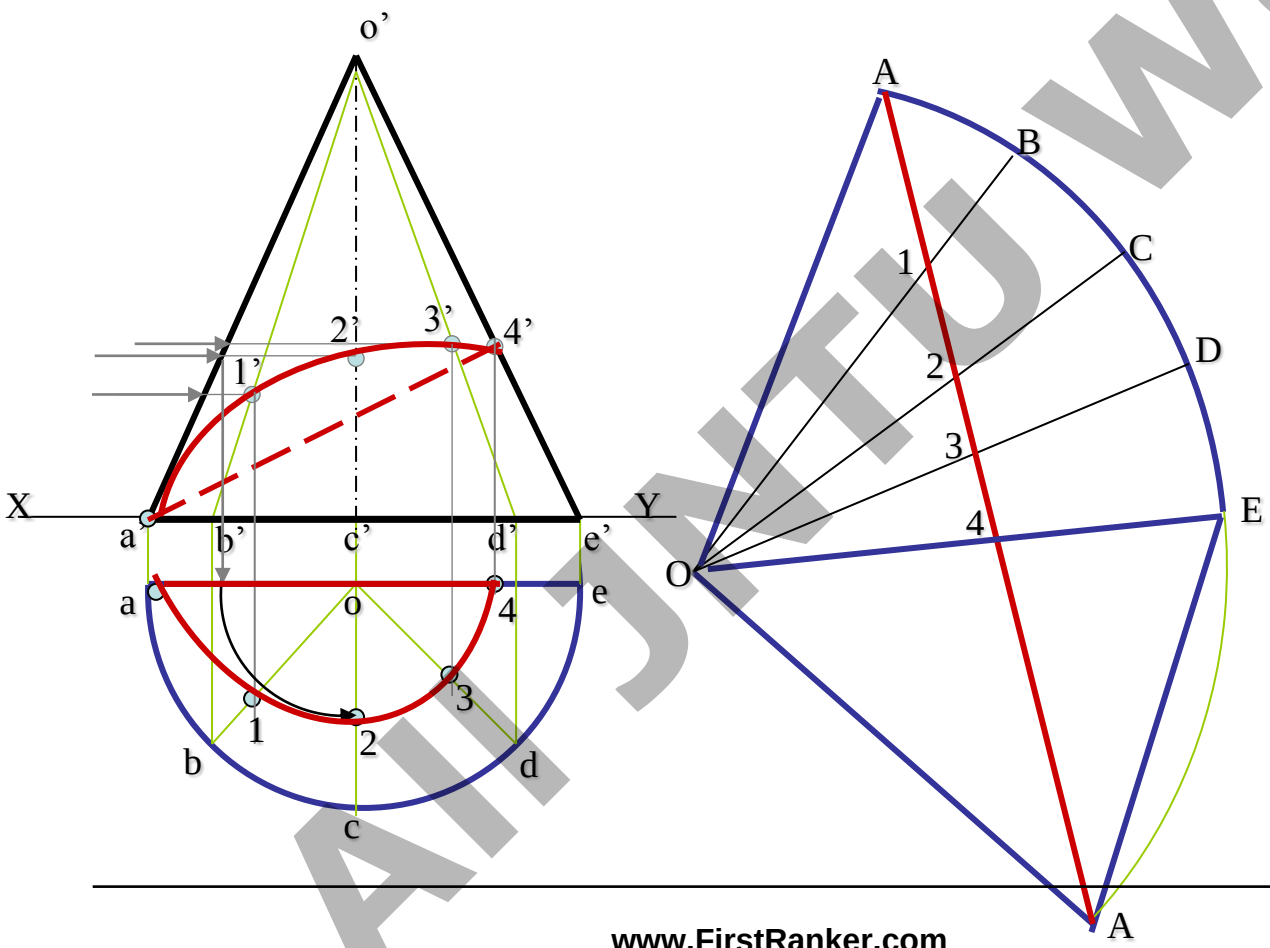

Concept: A
from a point
Point, of sho
Must appea
Developme
Solution st
Hence draw
Name it as
A to A This i
Length of th
Further step
On dev. Nam
Intersection
Different ge
Those on F
by smooth c
Draw 4' a' p
As it is on b

All JNTU World

FirstRanker.com
Firstranker's choice
www.FirstRanker.com www.FirstRanker.com

Q 15.26: draw the projections of a cone resting on the ground on its base and show on them, by which a point P, starting from a point on the circumference of the base and moving aroun return to the same point. Base ofn cone 65 mm diameter ; axis 75 mm long.

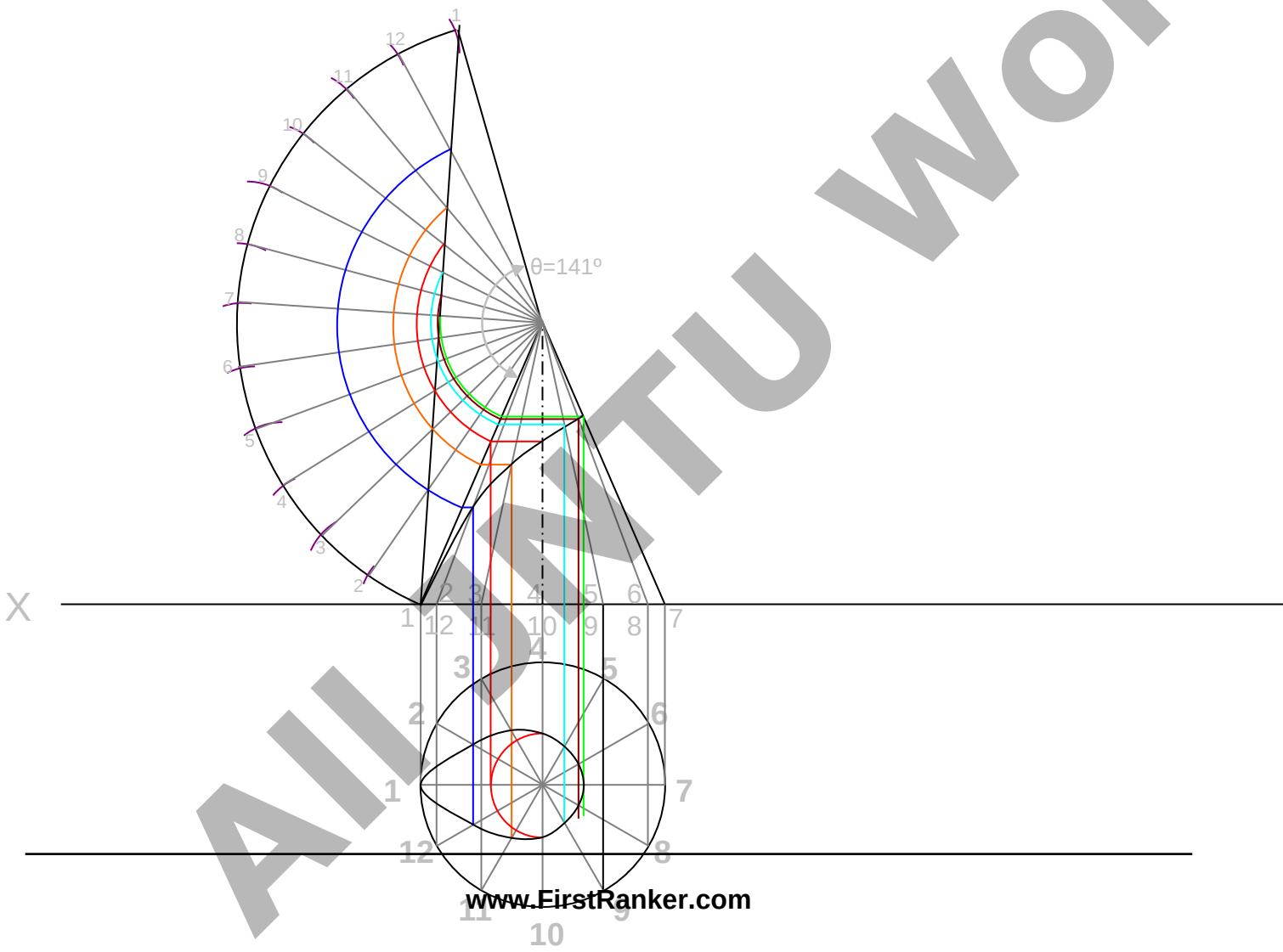

AllJNTU World
www.FirstRanker.com

Q.15.11: A right circular cylinder, base 50 mm diameter and axis 60 mm long, is standi base. It has a square hole of size 25 in it. The axis of the hole bisects the axis of the cyli perpendicular to the VP. The faces of the square hole are equally inclined with the HP. projections and develop lateral surface of the cylinder.

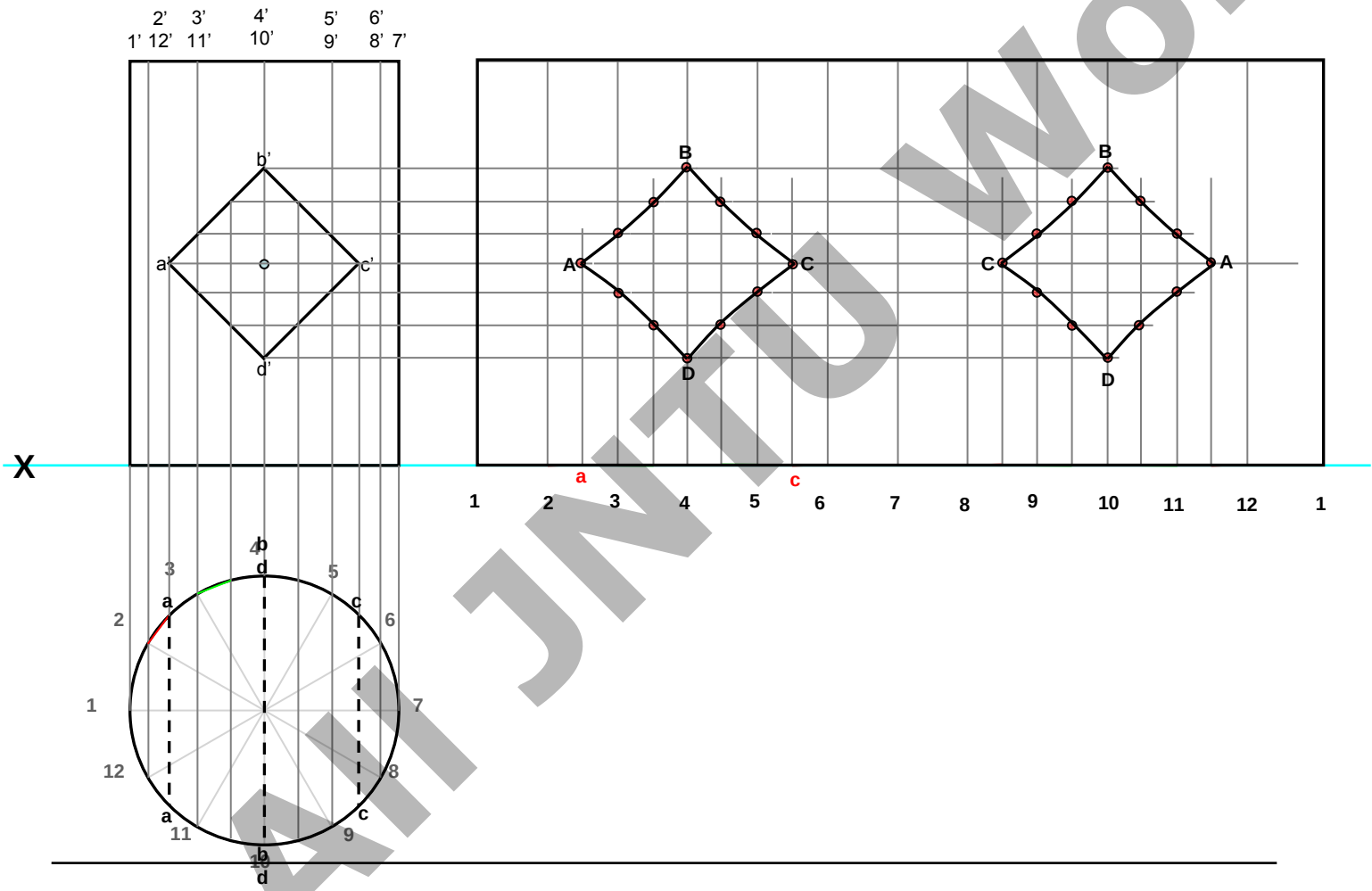

All JNTU World

FirstRanker.com
Firstranker's choice
www.FirstRanker.com www.FirstRanker.com

Q.15.21: A frustum of square pyramid has its base 50 mm side, top 25 mm side and axi the development of its lateral surface. Also draw the projections of the frustum (when and a side of its base is parallel to the VP), showing the line joining the mid point of a t face with the mid point of the bottom edge of the opposite face, by the shortest distanc

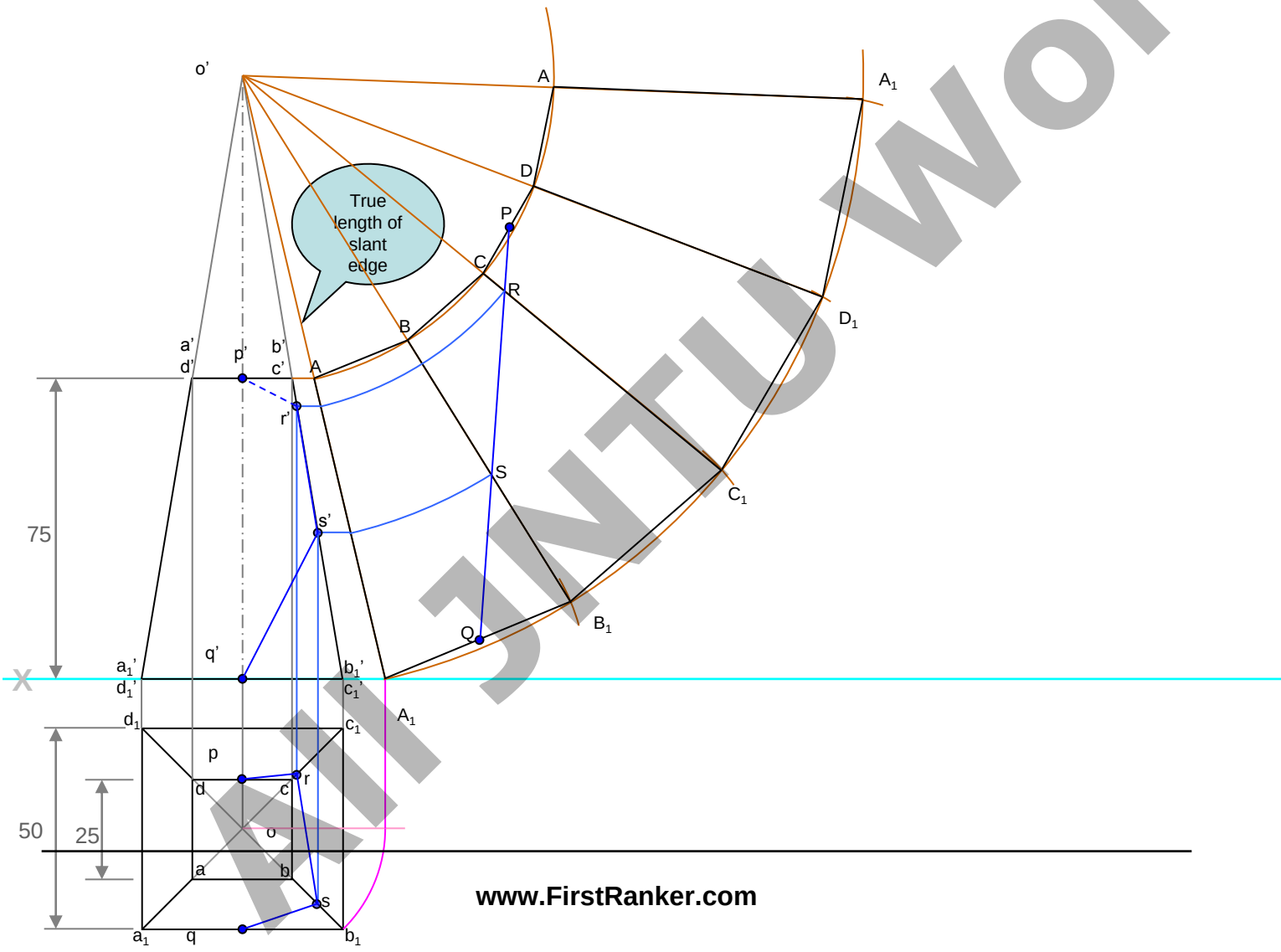

All JNTU World

www.FirstRanker.com

FirstRanker.com
Firstranker's choice
www.FirstRanker.com www.FirstRanker.com

Q: A square prism of 40 mm edge of the base and 65 mm height stands on its base vertical faces inclined at 45º with the VP. A horizontal hole of 40 mm diameter is through the prism such that the hole passes through the opposite vertical edges of the development og the surfaces of the prism.

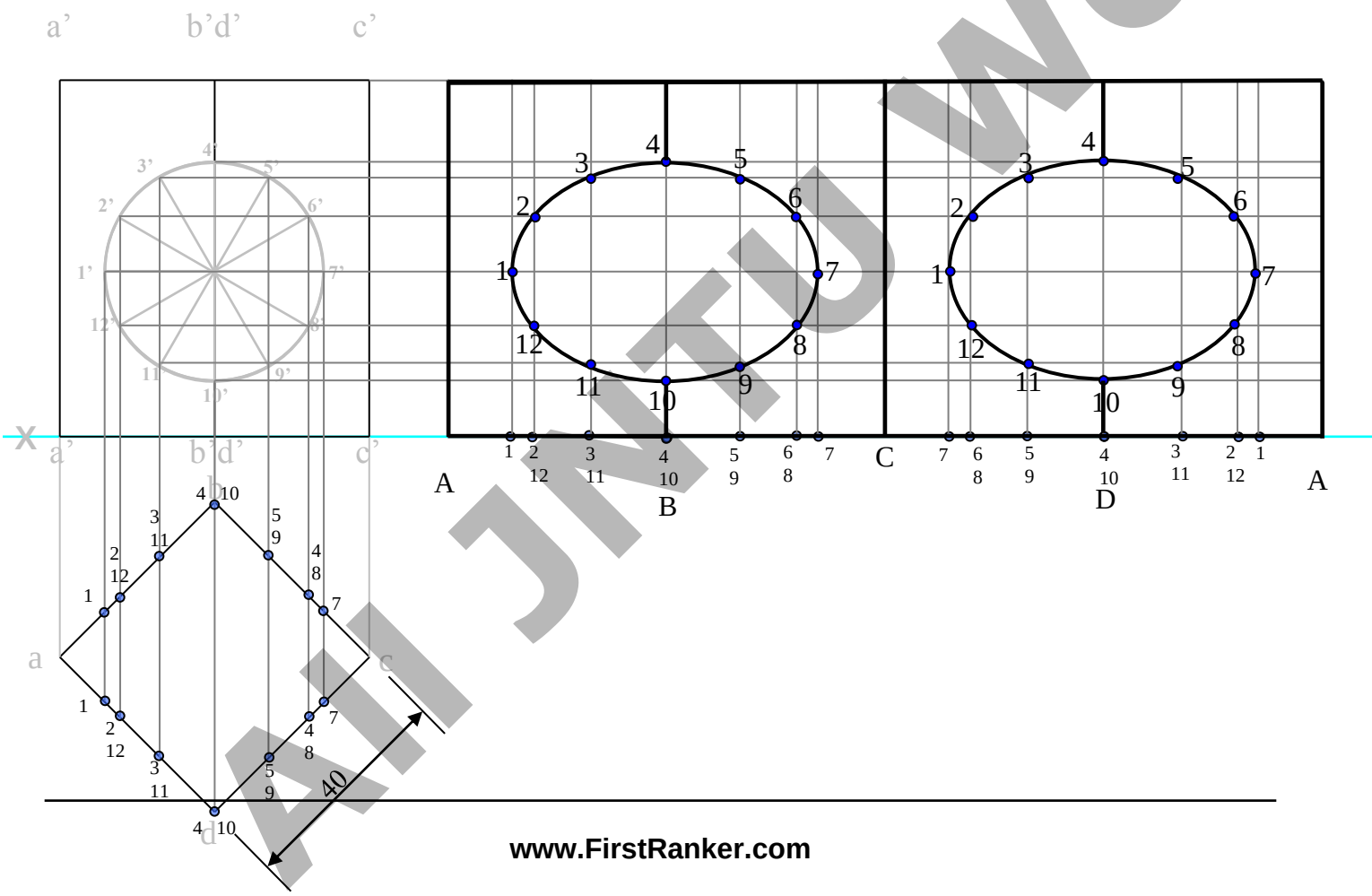

All JNTU World

www.FirstRanker.com

FirstRanker.com
Firstranker's choice

UNIT V

All JNTU World

FirstRanker.com
Firstranker's choice

DRAWINGS:

(A Graphical Representation)

The Fact about:

If compared with Verbal or Written Description,
Drawings offer far better idea about the Shape, Size & Appe
any object or situation or location, that too in quite a less

Hence it has become the Best Media of Communicatio
not only in Engineering but in almost all Fields.

All JNTU World

Drawings
(Some Types)

Nature Drawings
(landscape, scenery etc.)

Geographical Drawings
(maps etc.)

Botanical Drawings
(plants, flowers etc.)

Zoological Drawings
(creatures, animals etc.)

Portraits
(human faces, expressions etc.)

Enginee
(pr

Building Related Drawings.

Machine component Draw

Orthographic Projections
(Fv,Tv & Sv.-Mech.Engg terms)
(Plan, Elevation- Civil Engg.terms)
(Working Drawings 2-D type)

Isometric (Mech.Engg.Te
or Perspective(Civil Engg.T
(Actual Object Drawing 3-D

All JNTU World

FirstRanker.com
Firstranker's choice

Isometric projection

Projection on a plane such that mutually perpendicular edges appear at 12
each other.

Iso (same) angle between the axes.

Example shown for a cube tilted on its corner (like the photograph taken of
cube such that its edges appear at 120° to each other).

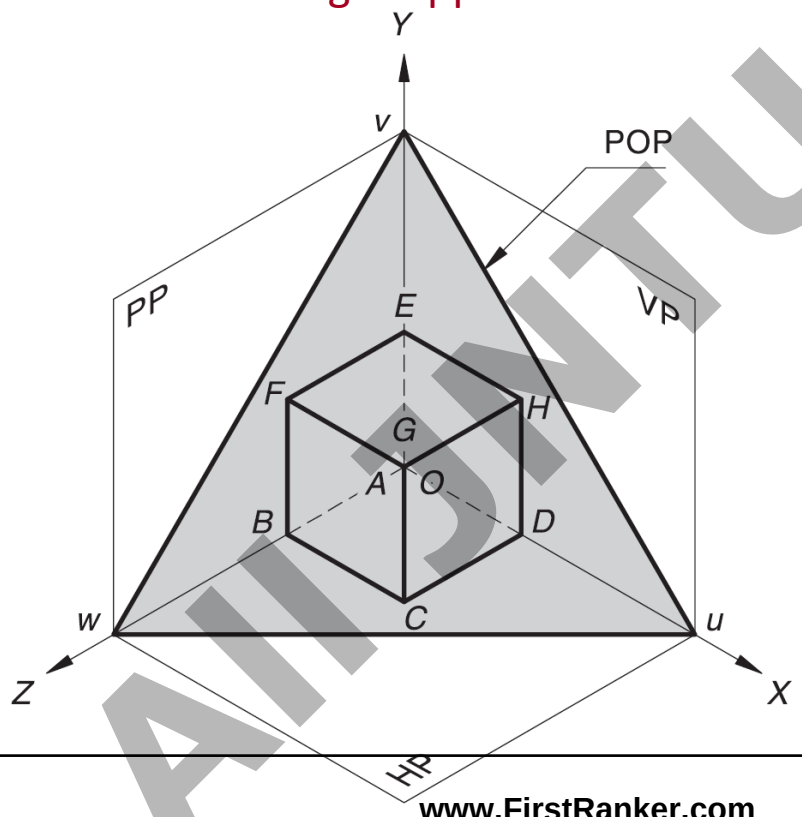

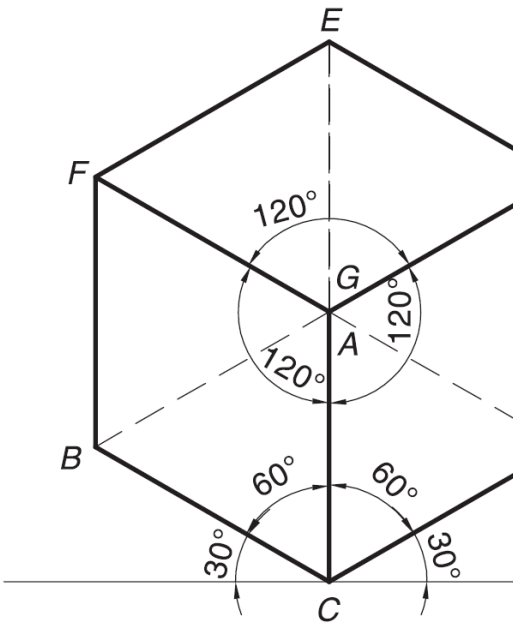

Isometric Projection of a Cub

AllJNTU World

Isometric projection is often constructed using isometric scale wh
dimensions smaller than the true dimensions.

However, to obtain isometric lengths from the isometric scale is
cumbersome task.

Therefore, the standard practice is to keep all dimensions as it is.

The view thus obtained is called *isometric view* or *isometric drawin*
isometric view utilizes actual dimensions, the isometric view of the
seen larger than its isometric projection.

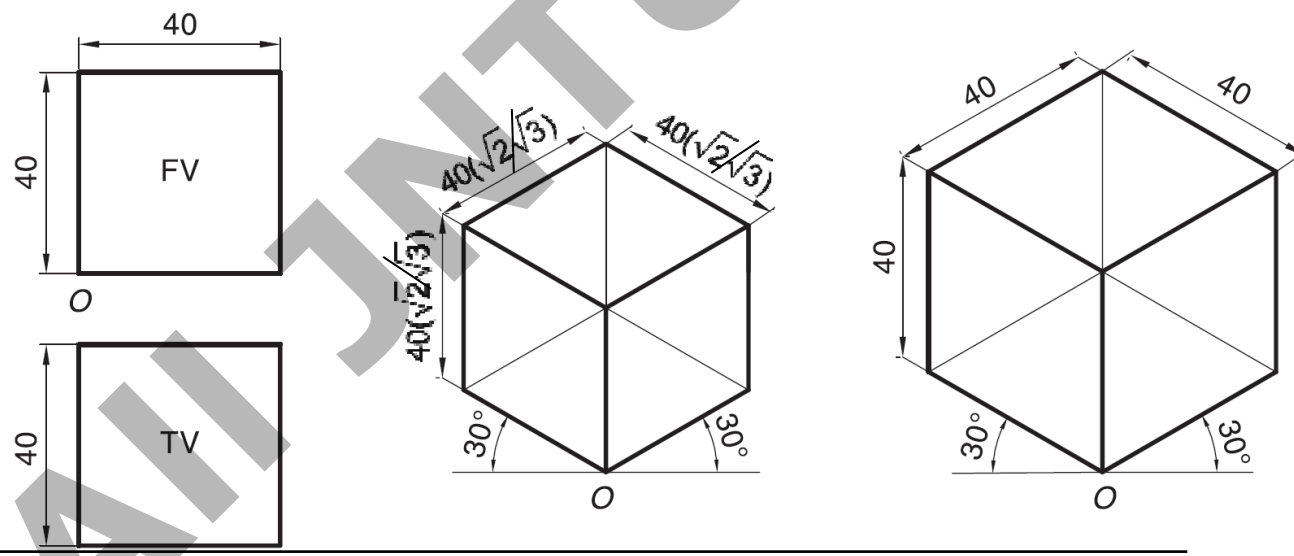

Orthographic Views Isometric Projection (Lengths taken from Isometric Scale) Isometric View

All JNTU World

FirstRanker.com
Firstranker's choice
www.FirstRanker.com www.FirstRanker.com

Isometric View

- It is a drawing showing the 3 dimensional view of a object.
- The perpendicular edges of an object are drawn o axes at 120º to each other.
- ACTUAL distances are drawn on the axes.

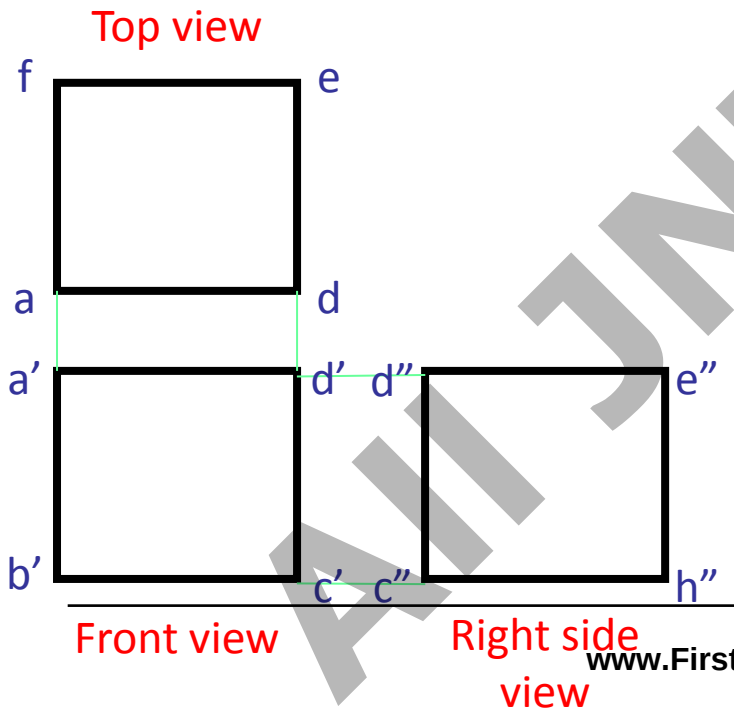

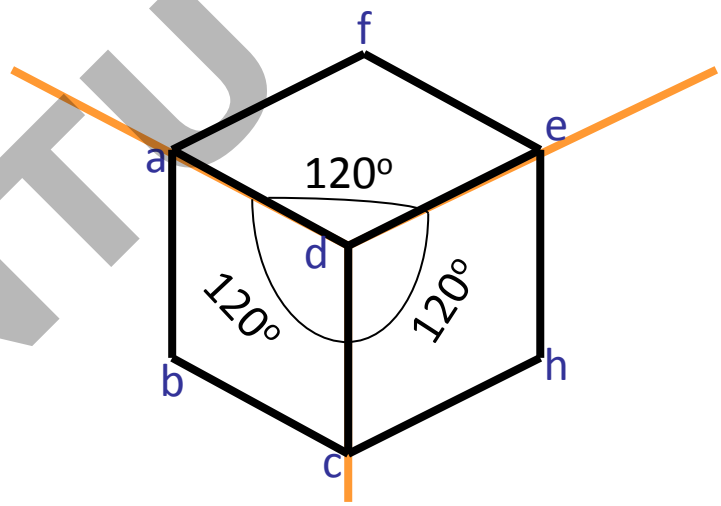

- Actual distances are drawn for distan parallel to the axes
- Hidden lines are not shown

All JNTU World

www.FirstRanker.com

FirstRanker.com
Firstranker's choice

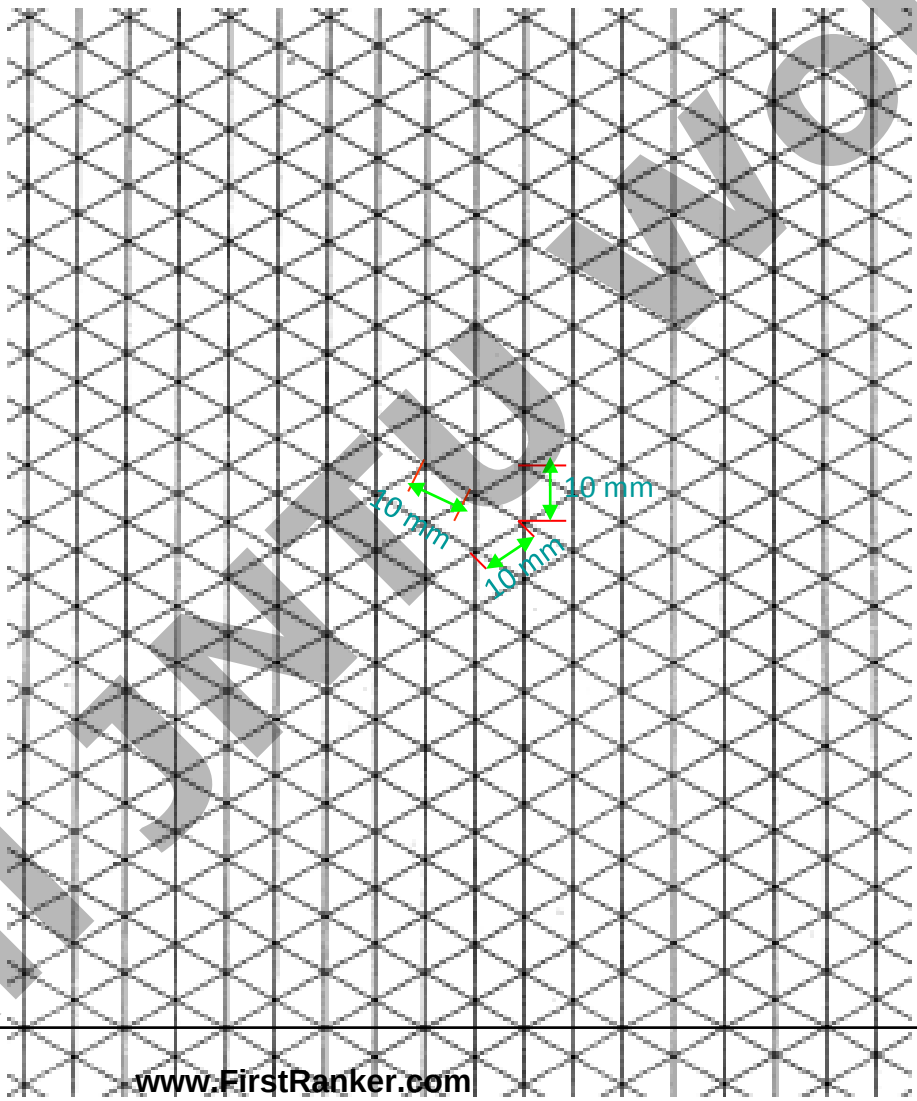

All JNTU World

FirstRanker.com
Firstranker's choice
www.FirstRanker.com www.FirstRanker.com

Isometric scale (not used except for spheres)

Earlier an isometric scale used to be used as shown below

This is because the relative distances get shortened in the isometric projection

Now a days, TRUE LENGTHS are drawn on the axes

$$\text{Isometric scale} = (\text{Isometric length/True length}) = \frac{\cos 45^\circ}{\cos 30^\circ} = \frac{1}{\sqrt{2}} \div \frac{\sqrt{3}}{2} = \frac{\sqrt{2}}{\sqrt{3}}$$

$$= 82\% \text{ (approximately)}$$

i.e., $\boxed{\text{Isometric length} = 0.82^* \text{ True length}}$

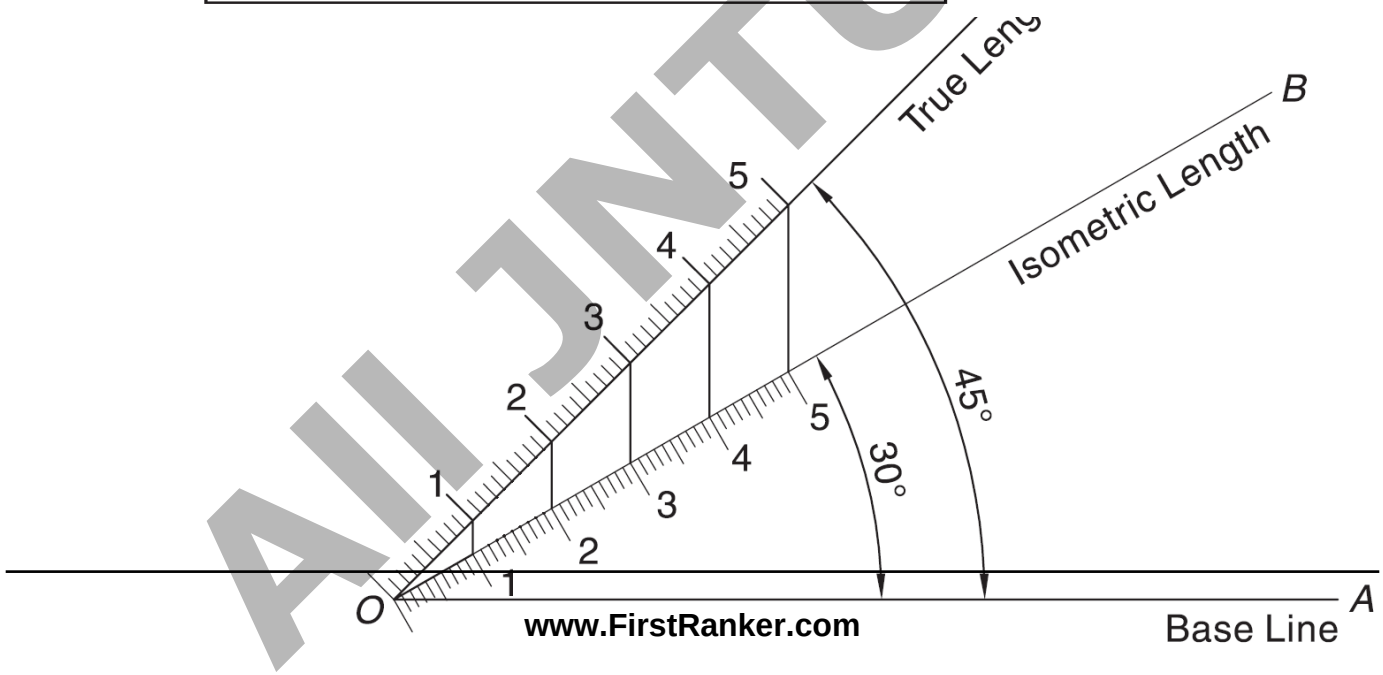

www.FirstRanker.com
All JNTU World

FirstRanker.com
Firstranker's choice

F.V. & T.V. and S.V.of an object are given. Draw it's isometric view.

ORTHOGRAPHIC PROJECTIONS

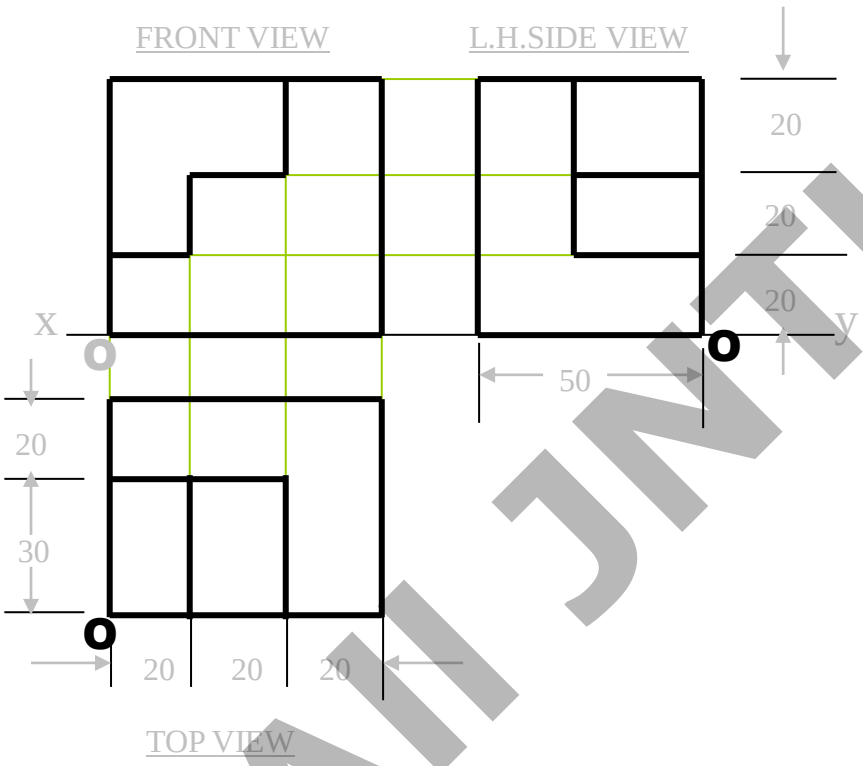

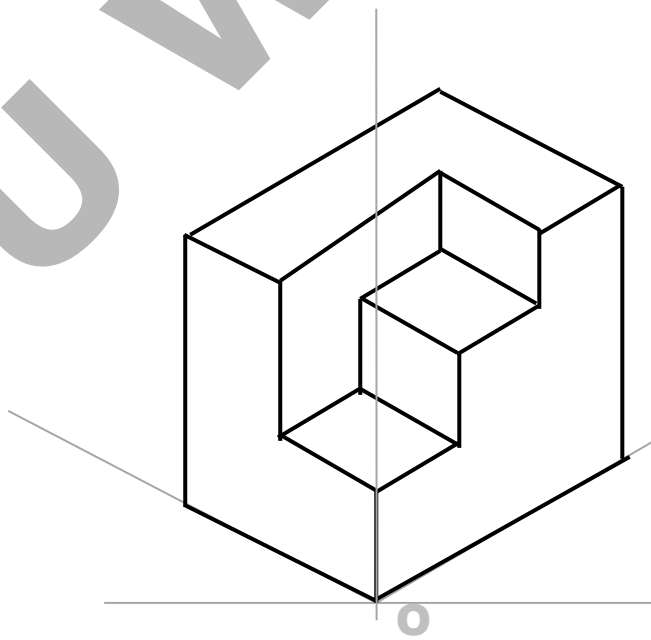

All JNTU World

FirstRanker.com
Firstranker's choice

Isometric view of polygons

- Polygons are first enclosed in a rectangle
- The corners lie on the sides of the rectangle
- The distances from the corner of the rectangle to the corners of the polygon are measured
- These distances are plotted on the isometric axes

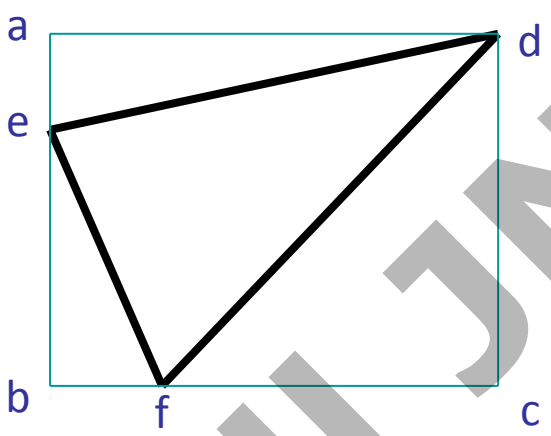

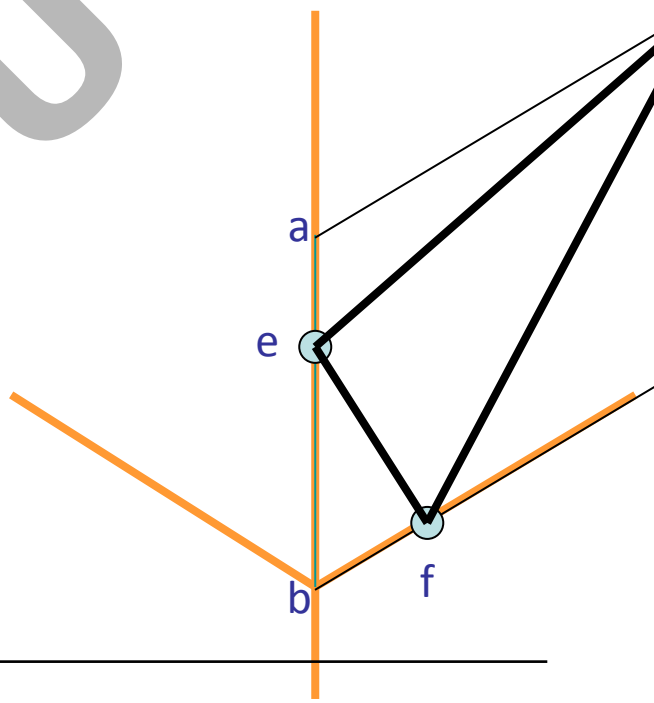

All JNTU World

All corners of polygon not on edges rectangle

Draw a rectangle covering as many polygon corners as possible. In this exam point i does not lie on the rectangle

From the edges of the rectangle, measure distances ki = cl and li = ck

Mark points f, g, h, j, and e in the isometric view similar to the previous exar

Mark distances ck and ki on the isometric view to get point i

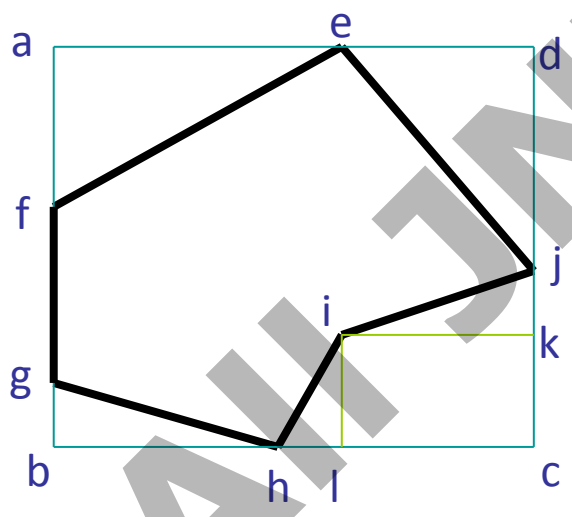

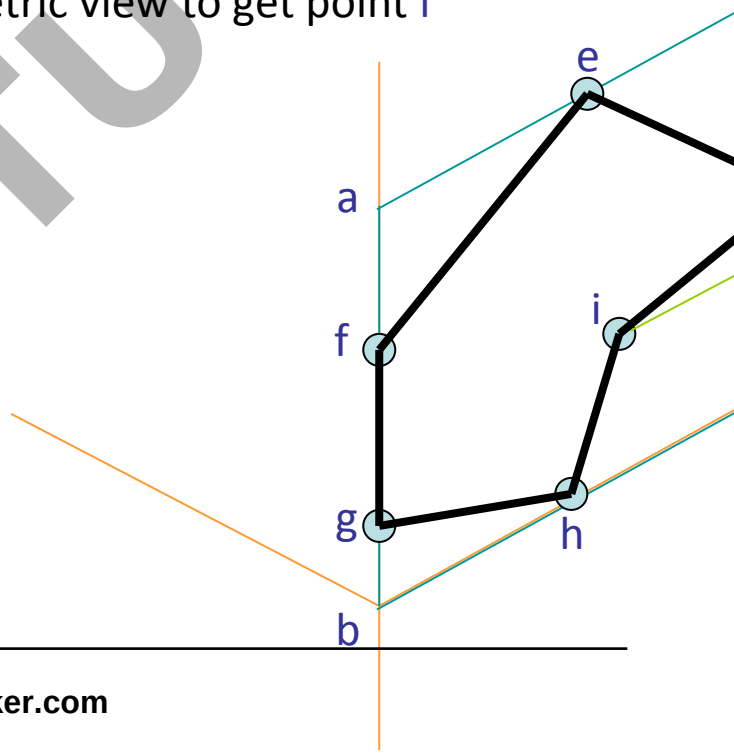

All JNTU World

FirstRanker.com
Firstranker's choice
www.FirstRanker.com www.FirstRanker.com

1

ISOMETRIC OF PLANE FIGURES

SHAPE	Isometric view if the Sha	
	F.V. or	T.V.

RECTANGLE

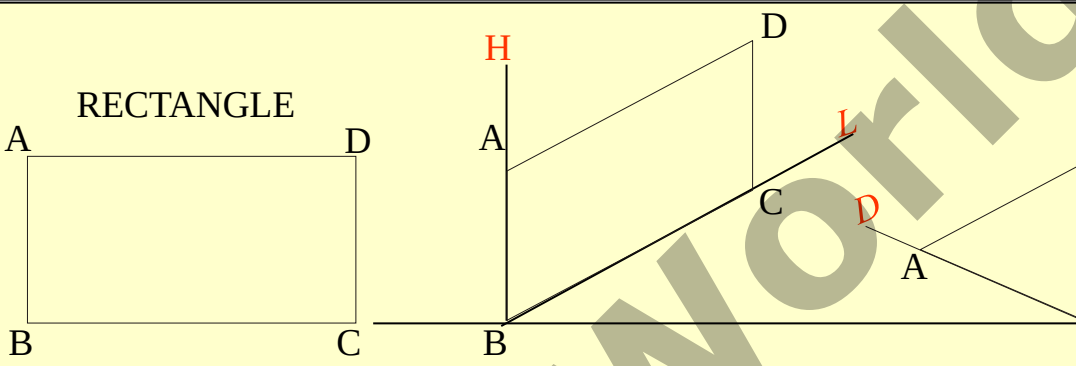

TRIANGLE

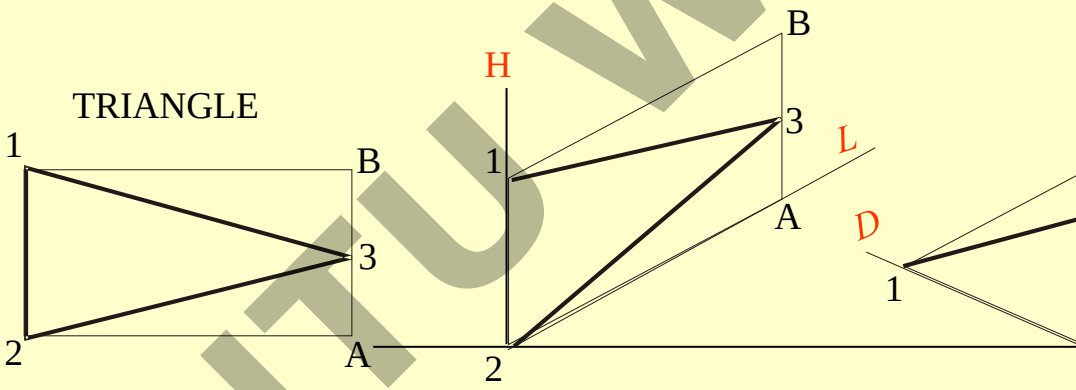

PENTAGON

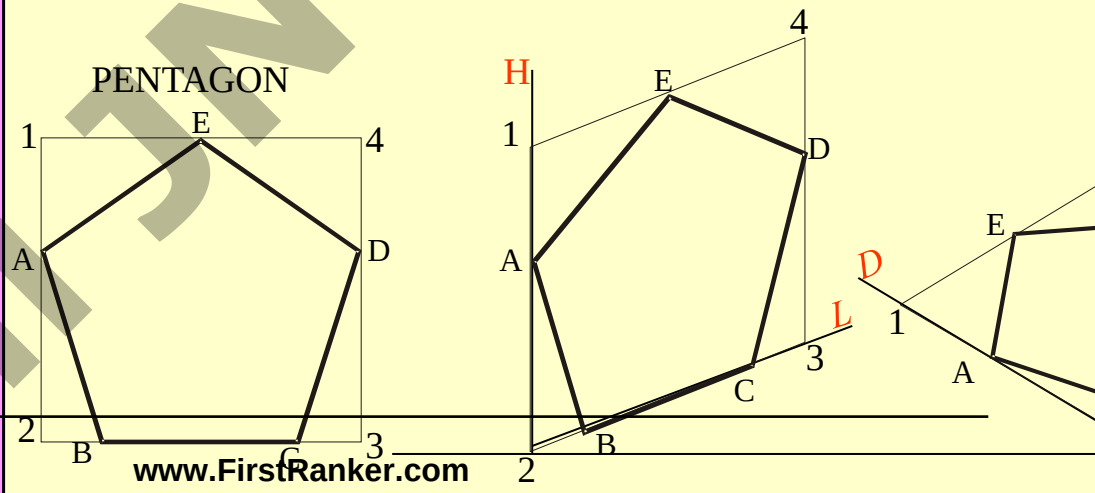

All JNTU World

www.FirstRanker.com

FirstRanker.com
Firstranker's choice

F.V. & T.V. of an object are given. Draw it's isometric view.

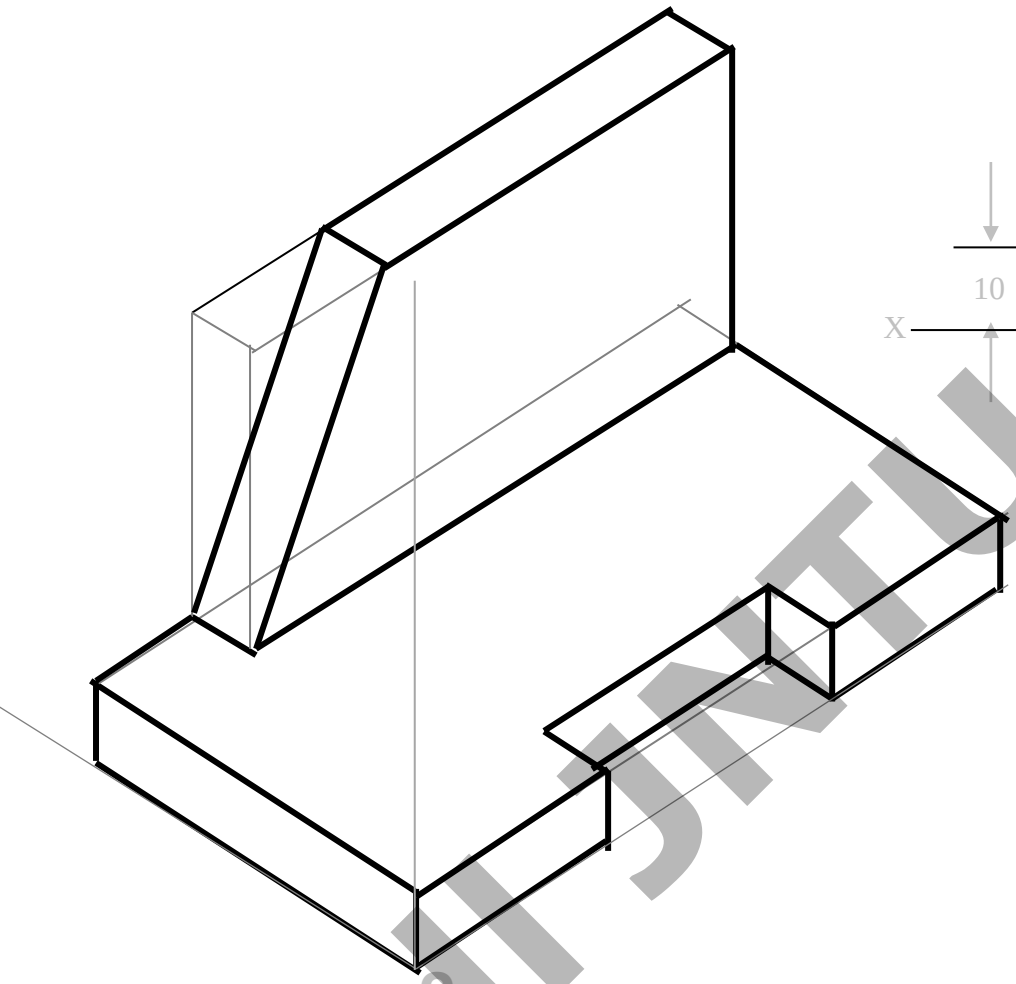

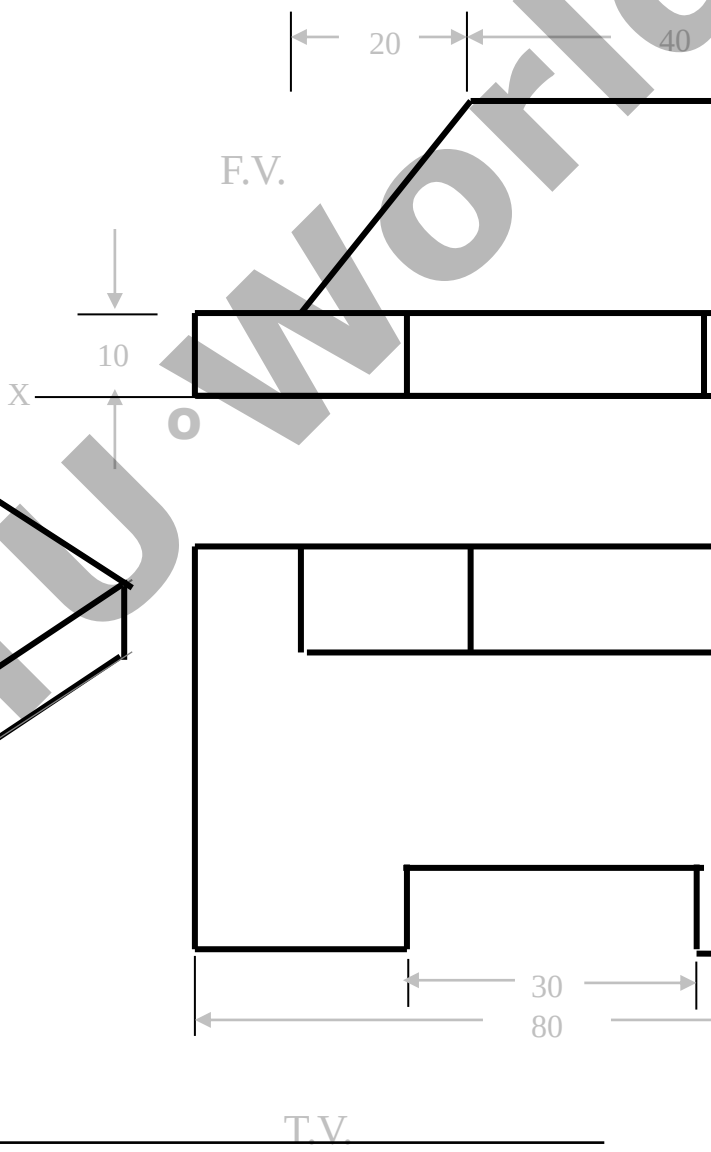

All JNTU World

FirstRanker.com
Firstranker's choice
www.FirstRanker.com www.FirstRanker.com

ISOMETRIC VIEW OF

FRUSTOM OF SQUARE PYRA

STANDING ON H.P. ON IT'S LARGER

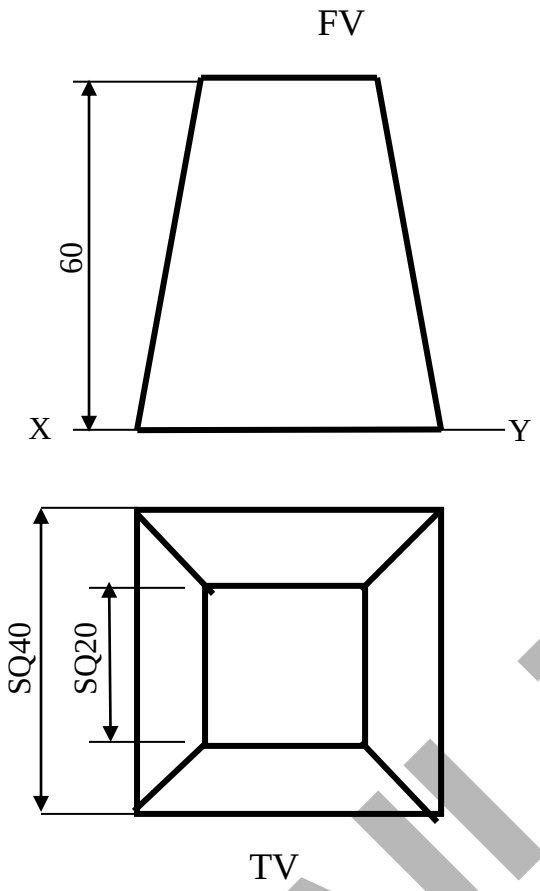

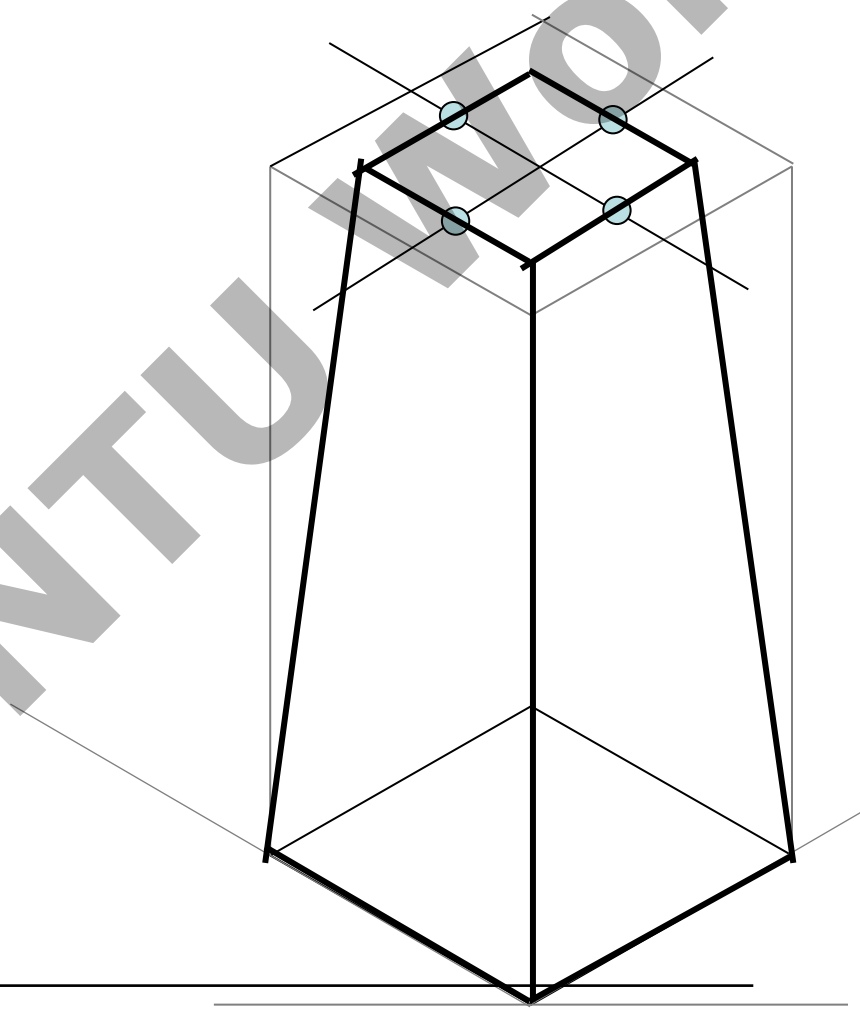

All JNTU World

www.FirstRanker.com

ORTHOGRAPHIC PROJECTIONS:

IT IS A TECHNICAL DRAWING IN WHICH DIFFERENT VIEWS OF
ARE PROJECTED ON DIFFERENT REFERENCE PLANE
OBSERVING PERPENDICULAR TO RESPECTIVE REFERENCE

Different Reference planes are

Horizontal Plane (HP),
Vertical Frontal Plane (VP)
Side Or Profile Plane (PP)

And

Different Views are Front View (FV), Top View (TV) and Side View

FV is a view projected on VP.
TV is a view projected on HP.
SV is a view projected on PP.

IMPORTANT TERMS OF ORTHOGRAPHIC PROJECTI

1. Planes.
2. Pattern of planes & Pattern of views
3. Methods of drawing Orthographic Projectior

All JNTU World

FirstRanker.com
Firstranker's choice
www.FirstRanker.com www.FirstRanker.com

1

PLANES

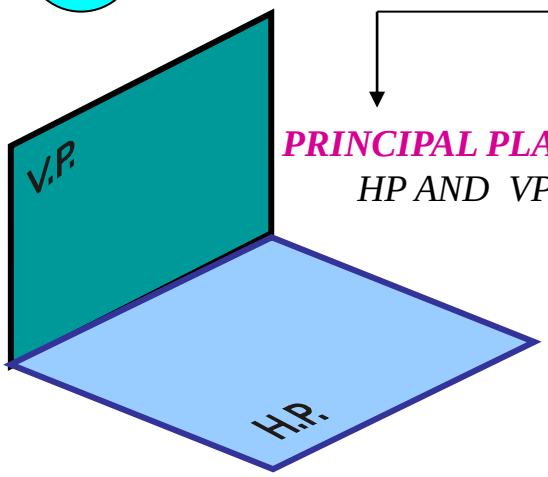

PRINCIPAL PLANES

HP AND VP

AUXILIARY PLANES

Auxiliary Vertical Plane (A.V.P.)

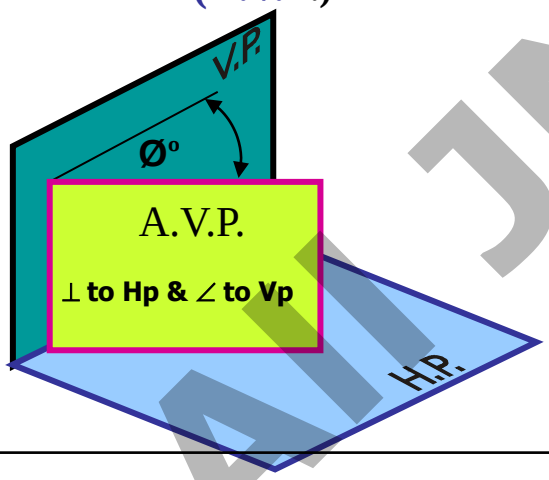

Auxiliary Inclined Plane (A.I.P.)

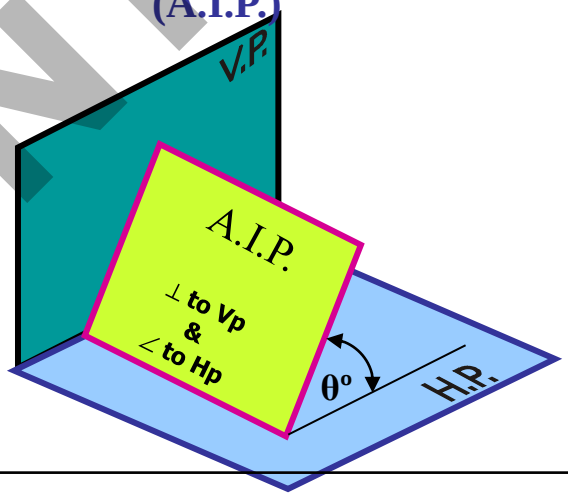

Profile Plan (P.P.)

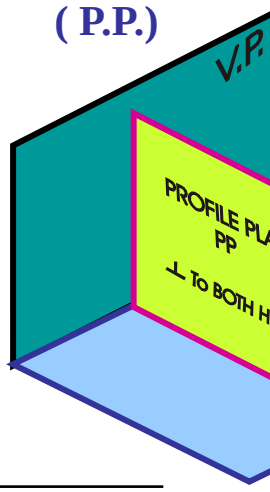

All JNTU World

www.FirstRanker.com

FirstRanker.com
Firstranker's choice
www.FirstRanker.com www.FirstRanker.com

2

PATTERN OF PLANES & VIEWS (First Angle Method)

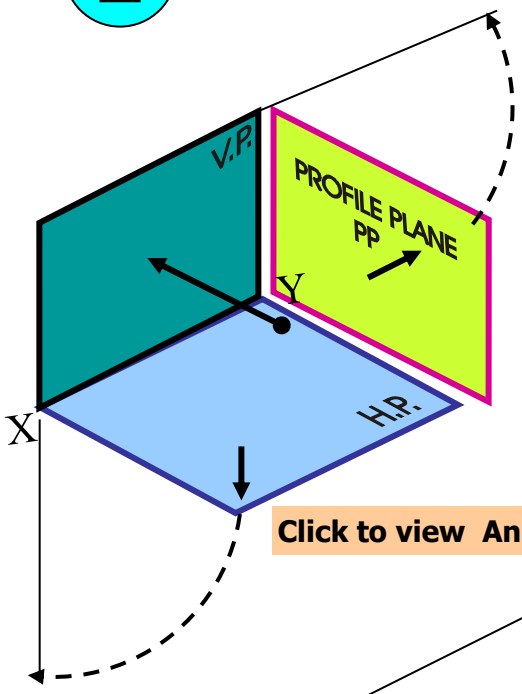

THIS IS A PICTORIAL SET-UP OF ALL THREE PLANES.
ARROW DIRECTION IS A NORMAL WAY OF OBSERVING THE O
BUT IN THIS DIRECTION ONLY VP AND A VIEW ON IT (FV) CAN
THE OTHER PLANES AND VIEWS ON THOSE CAN NOT BE SEE

PROCEDURE TO SOLVE ABOVE PROBLEM:-

TO MAKE THOSE PLANES ALSO VISIBLE FROM THE ARROW D
A) HP IS ROTATED 90^0 DOUNWARD
B) PP, 90^0 IN RIGHT SIDE DIRECTION.
THIS WAY BOTH PLANES ARE BROUGHT IN THE SAME PLANE

Click to view Animation

On clicking the button if a warning comes please click YES to con
safe for your pc.

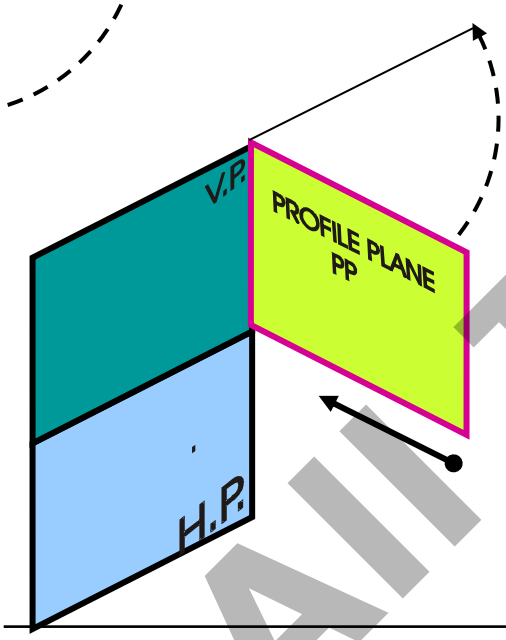

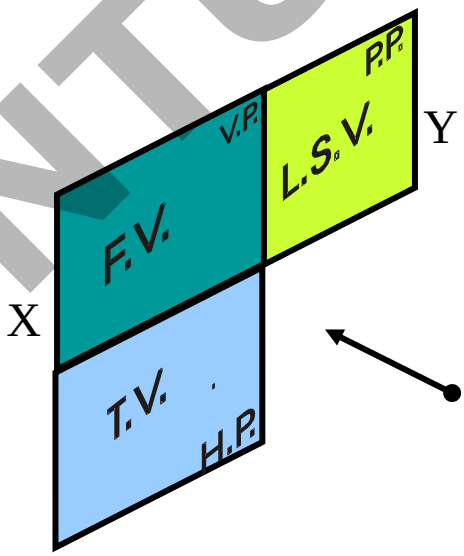

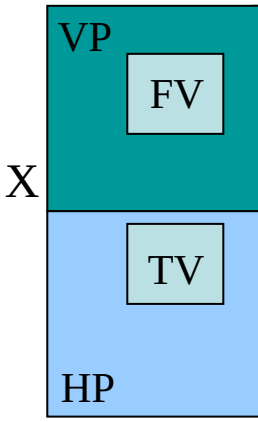

HP IS ROTATED DOWNWARD 90^0
AND
BROUGHT IN THE PLANE OF VP.

PP IS ROTATED IN RIGHT SIDE 90^0
AND
BROUGHT IN THE PLANE OF VP.

ACTUAL PATTERN OF
OF ORTHOGRAPHIC
DRAWN
FIRST ANGLE METHOD

www.FirstRanker.com
AITJNTU World

FirstRanker.com
Firstranker's choice
www.FirstRanker.com www.FirstRanker.com

3

Methods of Drawing Orthographic Projections

First Angle Projections Method

Here views are drawn
by placing object
in 1st Quadrant
(Fv above X-y, Tv below X-y)

Third Angle Project

Here views are
by placing o
in 3rd Qua
(Tv above X-y, Fv

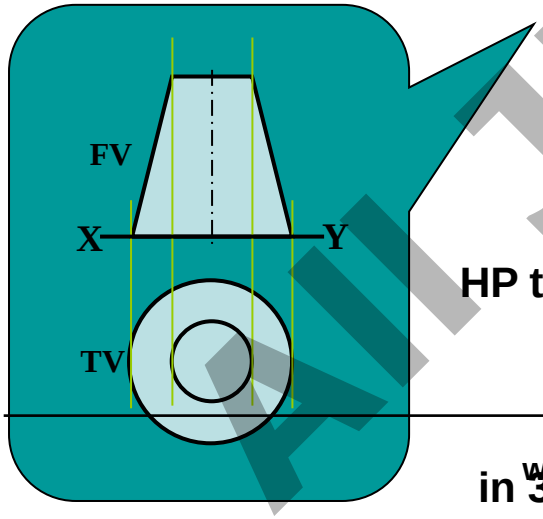

SYMBOLIC PRESENTATION OF BOTH METHODS WITH AN OBJECT STANDING ON HP (GROUND) ON IT'S BASE.

NOTE:-

HP term is used in 1st Angle method
&
For the same
Ground term is used
in 3rd Angle method of projections

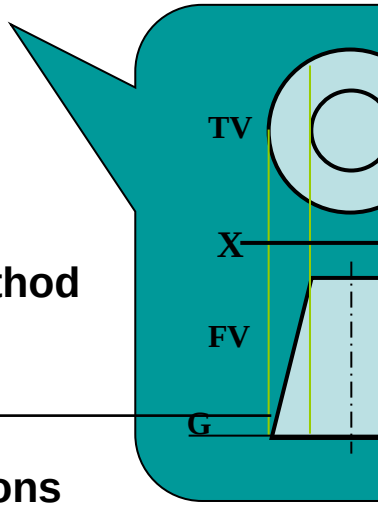

www.FirstRanker.com
All JNTU World

FirstRanker.com
Firstranker's choice
www.FirstRanker.com www.FirstRanker.com

FIRST ANGLE PROJECTION

**IN THIS METHOD,
THE OBJECT IS ASSUMED TO BE SITUATED IN FIRST QUADRANT
MEANS
ABOVE HP & INFRONT OF VP.**

OBJECT IS INBETWEEN OBSERVER & PLANE.

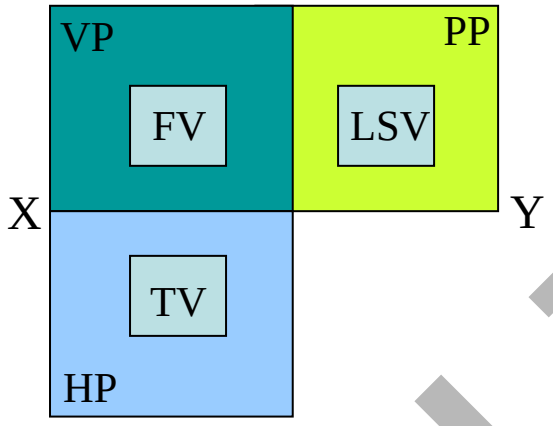

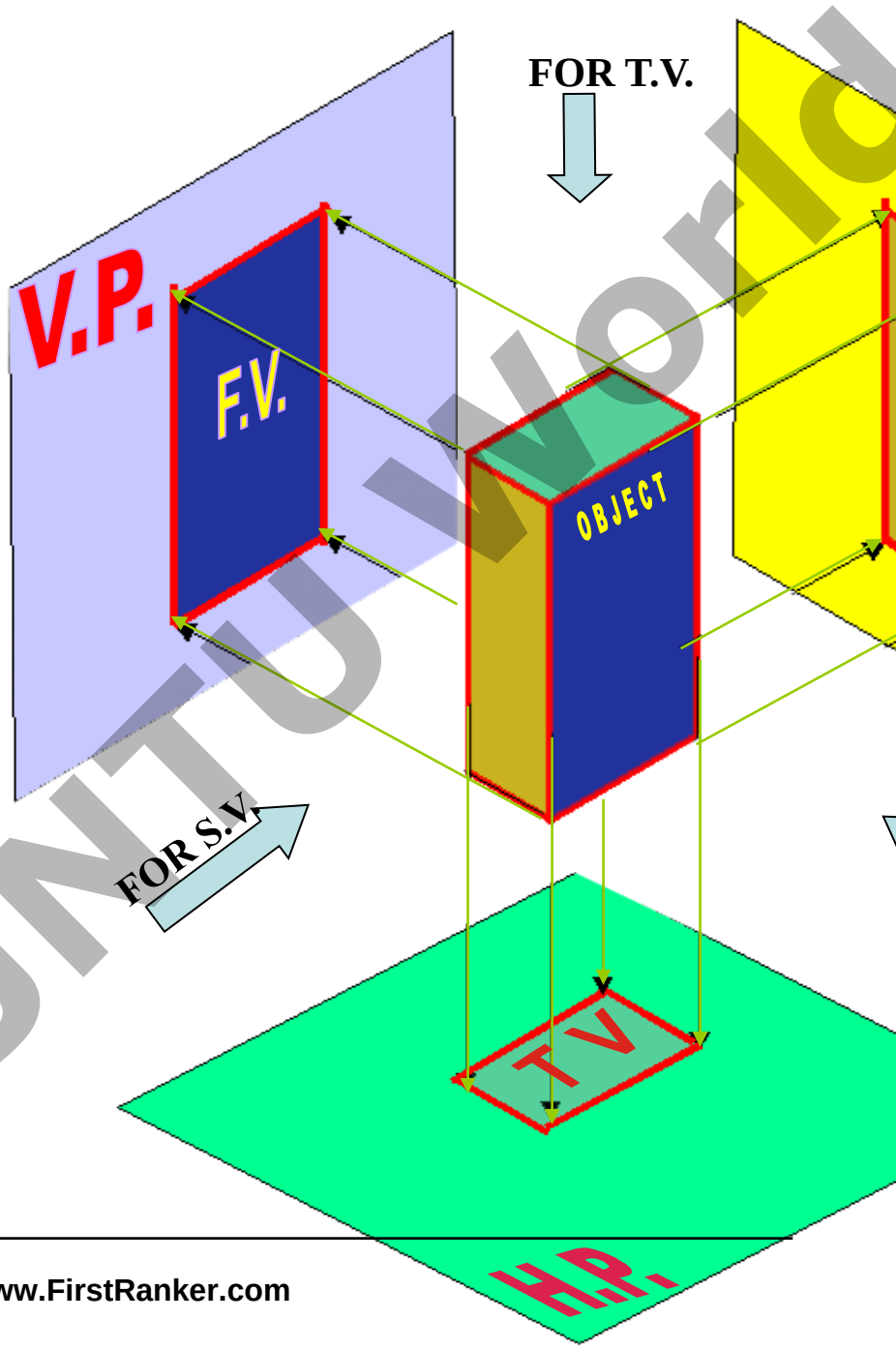

ACTUAL PATTERN OF PLANES & VIEWS IN FIRST ANGLE METHOD OF PROJECTIONS

All JNTU World

www.FirstRanker.com

FirstRanker.com
Firstranker's choice
www.FirstRanker.com www.FirstRanker.com

THIRD ANGLE PROJECTION

**IN THIS METHOD,
THE OBJECT IS ASSUMED TO BE
SITUATED IN THIRD QUADRANT
(BELOW HP & BEHIND OF VP.)**

**PLANES BEING TRANSPERENT
AND INBETWEEN
OBSERVER & OBJECT.**

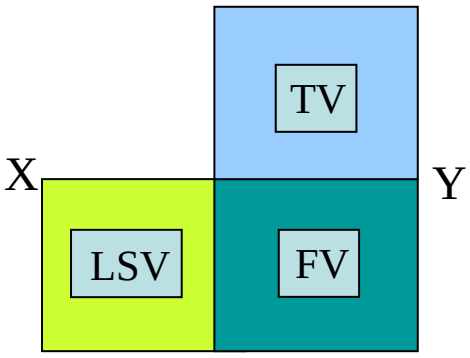

**ACTUAL PATTERN OF
PLANES & VIEWS
OF
THIRD ANGLE PROJECTIONS**

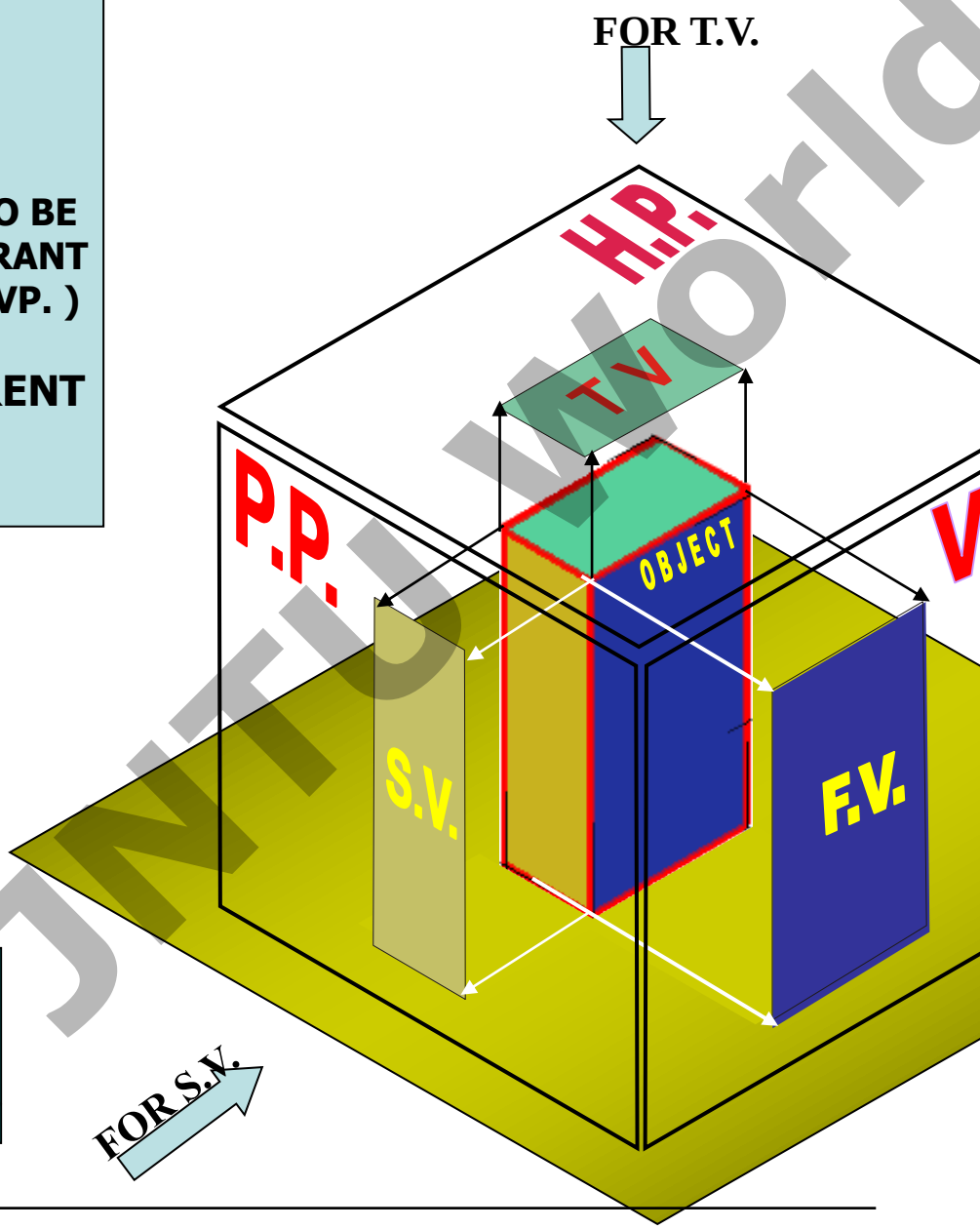

All JNTU World

www.FirstRanker.com

FirstRanker.com
Firstranker's choice
www.FirstRanker.com www.FirstRanker.com

ORTHOGRAPHIC PROJECTIONS
{ MACHINE ELEMENTS }

OBJECT IS OBSERVED IN THREE DIRECTIONS.
THE DIRECTIONS SHOULD BE NORMAL
TO THE RESPECTIVE PLANES.
AND NOW PROJECT THREE DIFFERENT VIEWS ON THOSE
THESE VEWS ARE FRONT VIEW , TOP VIEW AND SIDE V

FRONT VIEW IS A VIEW PROJECTED ON VERTICAL PLAN
TOP VIEW IS A VIEW PROJECTED ON HORIZONTAL PLAN
SIDE VIEW IS A VIEW PROJECTED ON PROFILE PLANE

FIRST STUDY THE CONCEPT OF 1ST AND 3RD AN
PROJECTION METHODS

AND THEN STUDY NEXT 26 ILLUSTRATED CASES CA
TRY TO RECOGNIZE SURFACES
PERPENDICULAR TO THE ARROW DIRECTIONS

www.FirstRanker.com
All JNTU World

FirstRanker.com
Firstranker's choice
www.FirstRanker.com www.FirstRanker.com

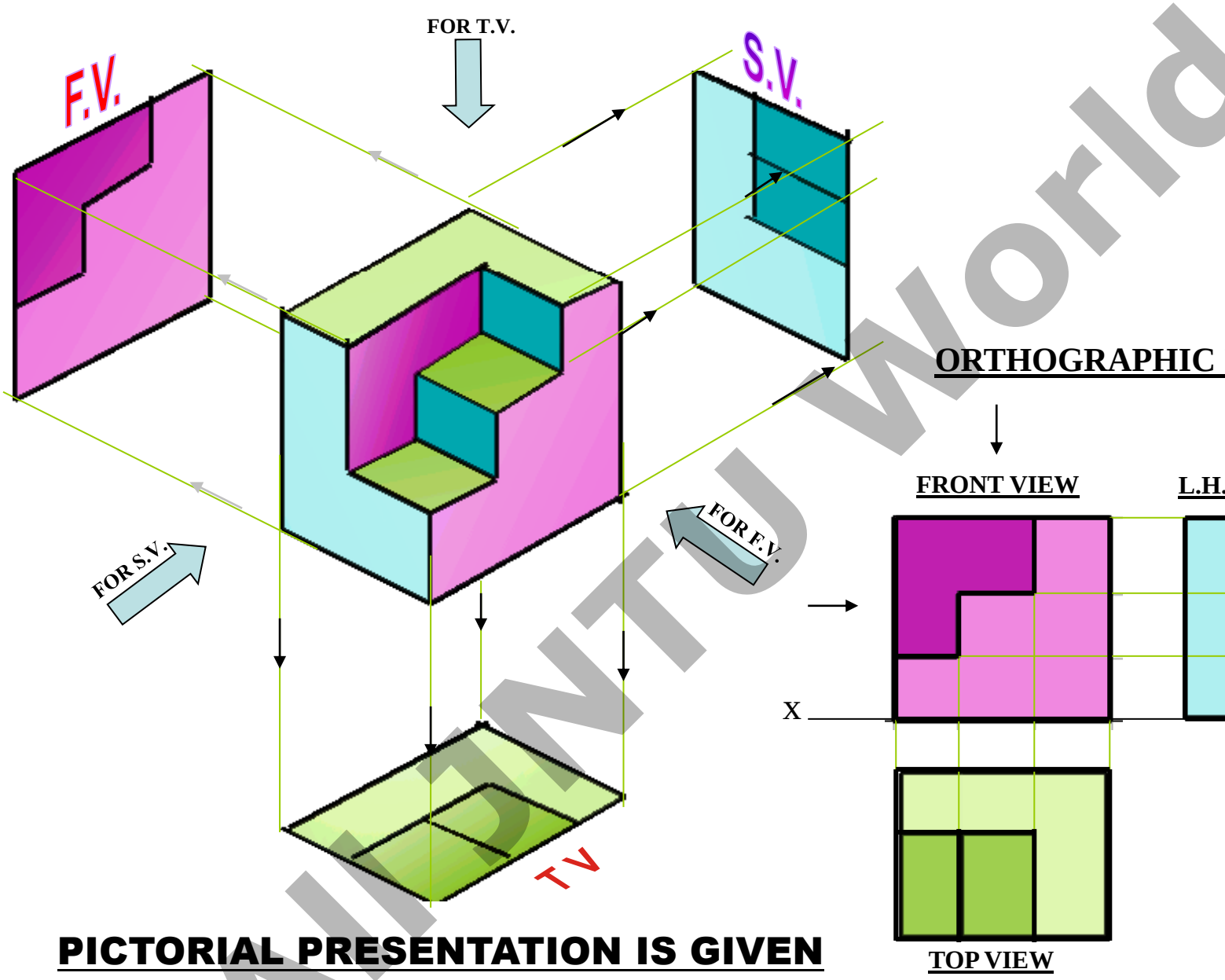

PICTORIAL PRESENTATION IS GIVEN

DRAW THREE VIEWS OF THIS OBJECT
BY FIRST ANGLE PROJECTION METHOD

AllJNTU World
www.FirstRanker.com

FirstRanker.com
Firstranker's choice
www.FirstRanker.com www.FirstRanker.com

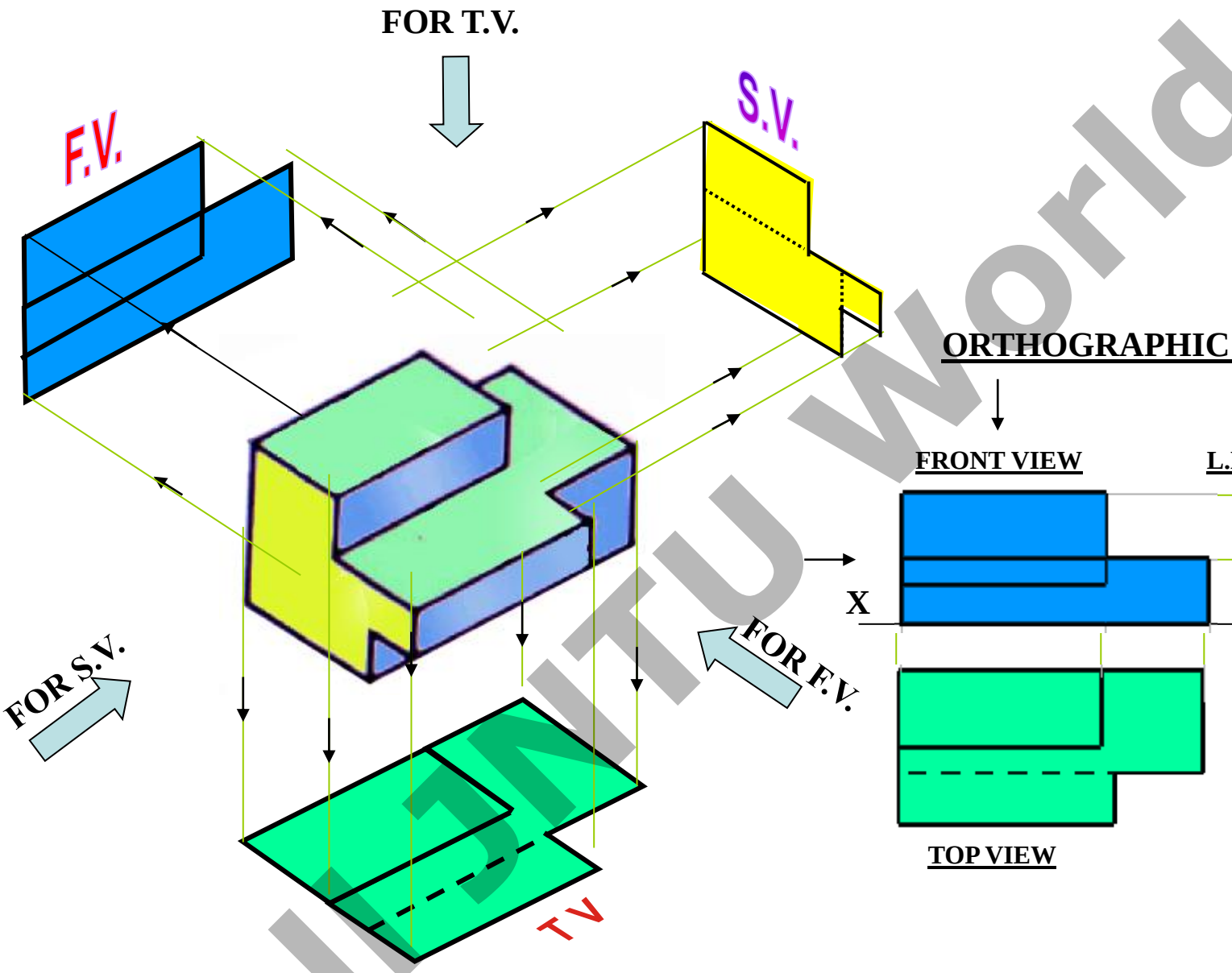

PICTORIAL PRESENTATION IS GIVEN

DRAW THREE VIEWS OF THIS OBJECT
BY FIRST ANGLE PROJECTION METHOD

AllJNTU World
www.FirstRanker.com

FirstRanker.com
Firstranker's choice
www.FirstRanker.com www.FirstRanker.com

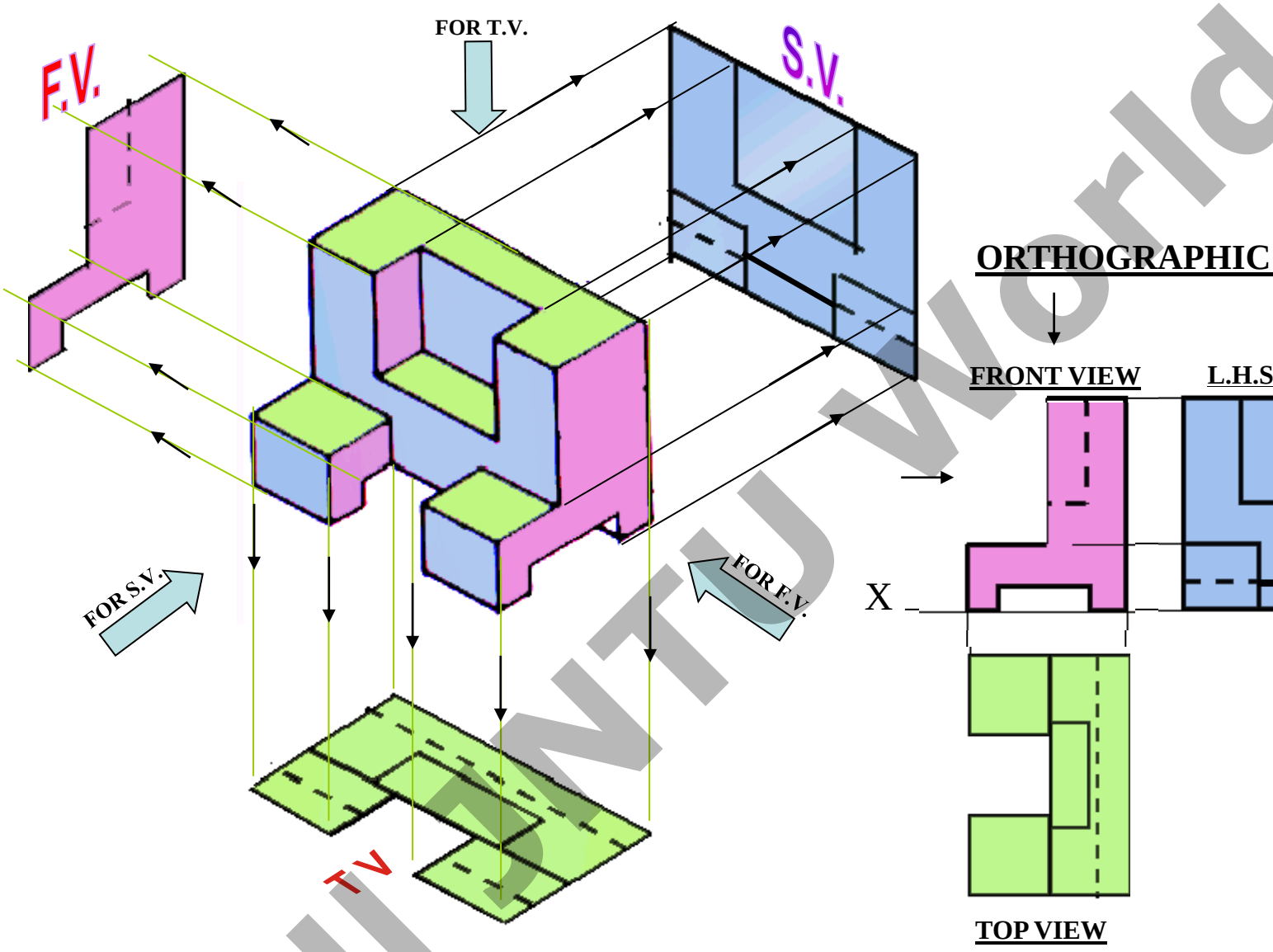

PICTORIAL PRESENTATION IS GIVEN

DRAW THREE VIEWS OF THIS OBJECT

BY FIRST ANGLE PROJECTION METHOD

All JNTU World
www.FirstRanker.com

FirstRanker.com
Firstranker's choice
www.FirstRanker.com www.FirstRanker.com

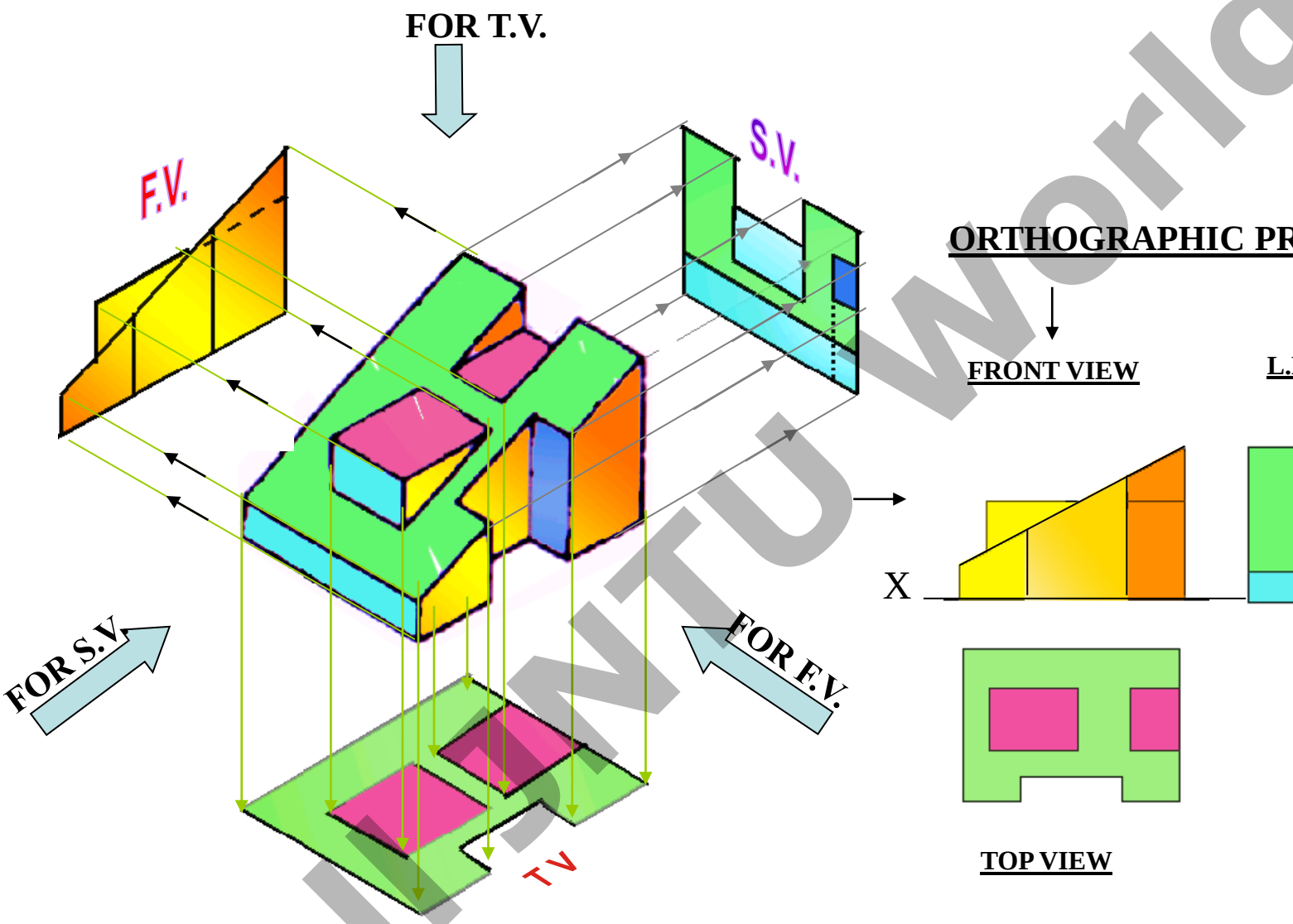

PICTORIAL PRESENTATION IS GIVEN

DRAW THREE VIEWS OF THIS OBJECT
BY FIRST ANGLE PROJECTION METHOD

www.FirstRanker.com
All JNTU World

FirstRanker.com
Firstranker's choice
www.FirstRanker.com www.FirstRanker.com

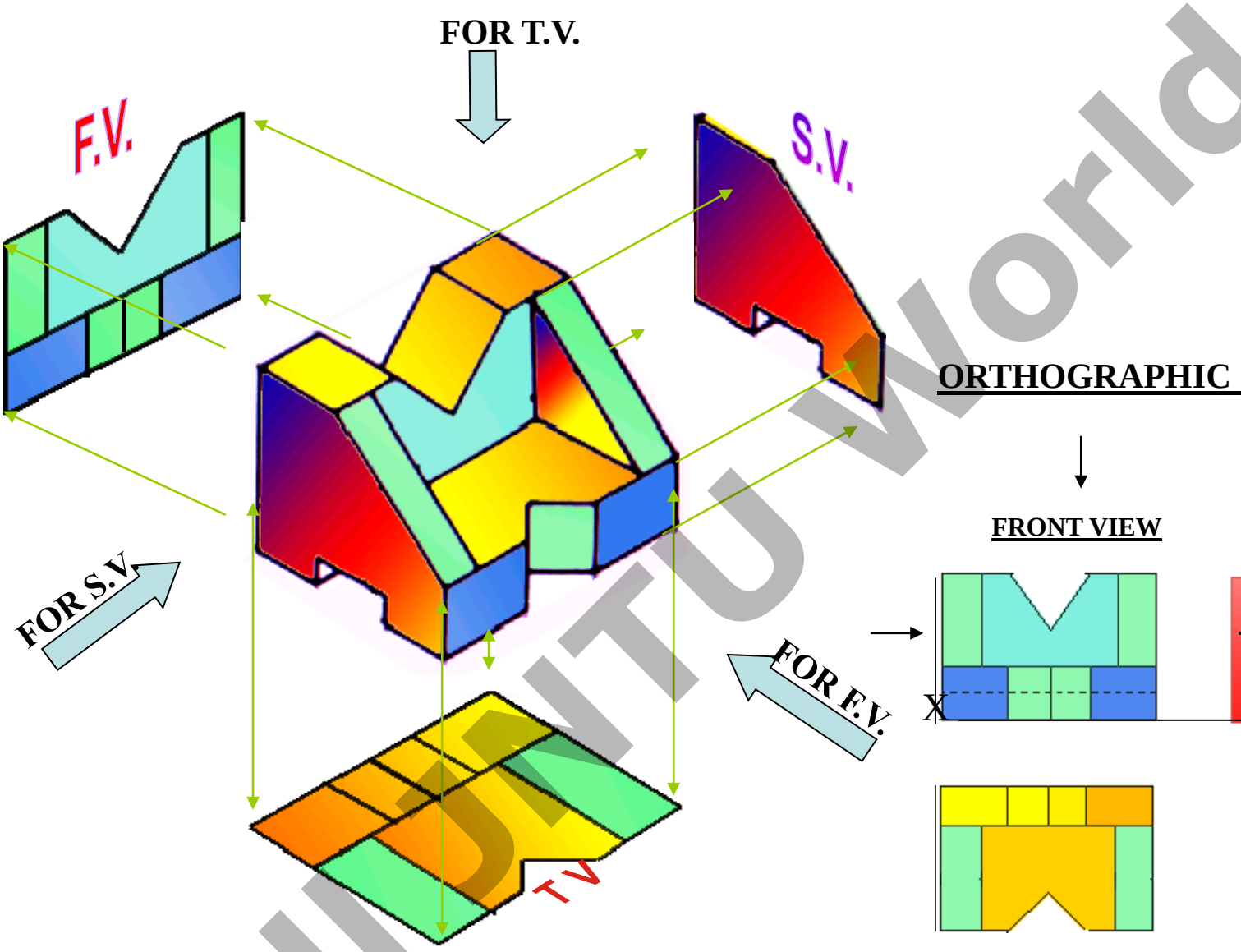

PICTORIAL PRESENTATION IS GIVEN

DRAW THREE VIEWS OF THIS OBJECT
BY FIRST ANGLE PROJECTION METHOD

www.FirstRanker.com
AllJNTU World

FirstRanker.com
Firstranker's choice
www.FirstRanker.com www.FirstRanker.com

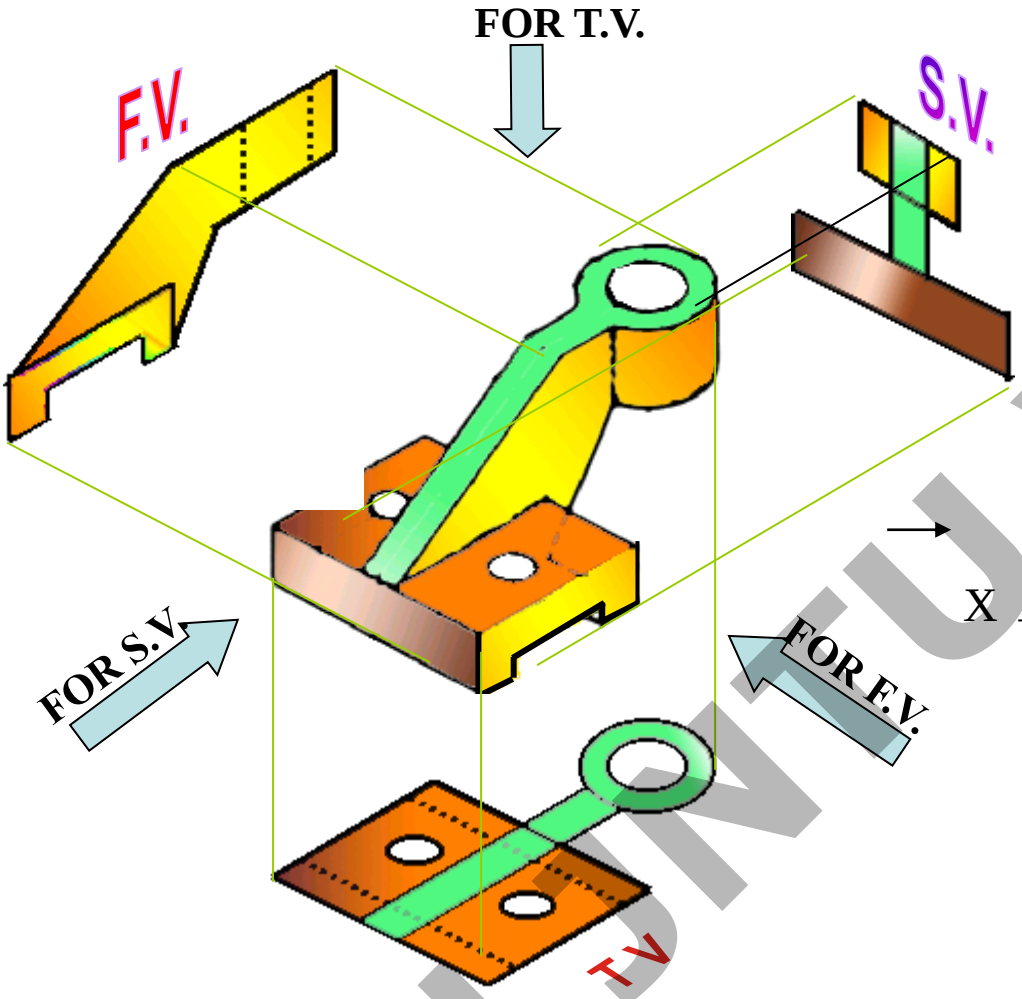

ORTHOGRAPHIC PR

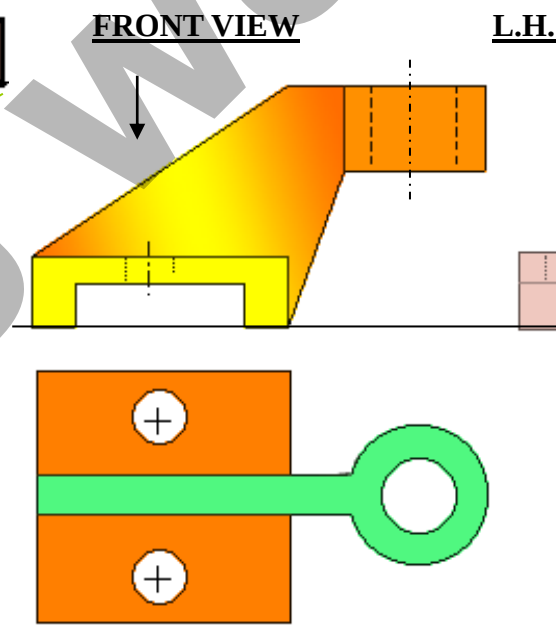

PICTORIAL PRESENTATION IS GIVEN

DRAW THREE VIEWS OF THIS OBJECT

BY FIRST ANGLE PROJECTION METHOD

All JNTU World

www.FirstRanker.com

FirstRanker.com
Firstranker's choice
www.FirstRanker.com www.FirstRanker.com

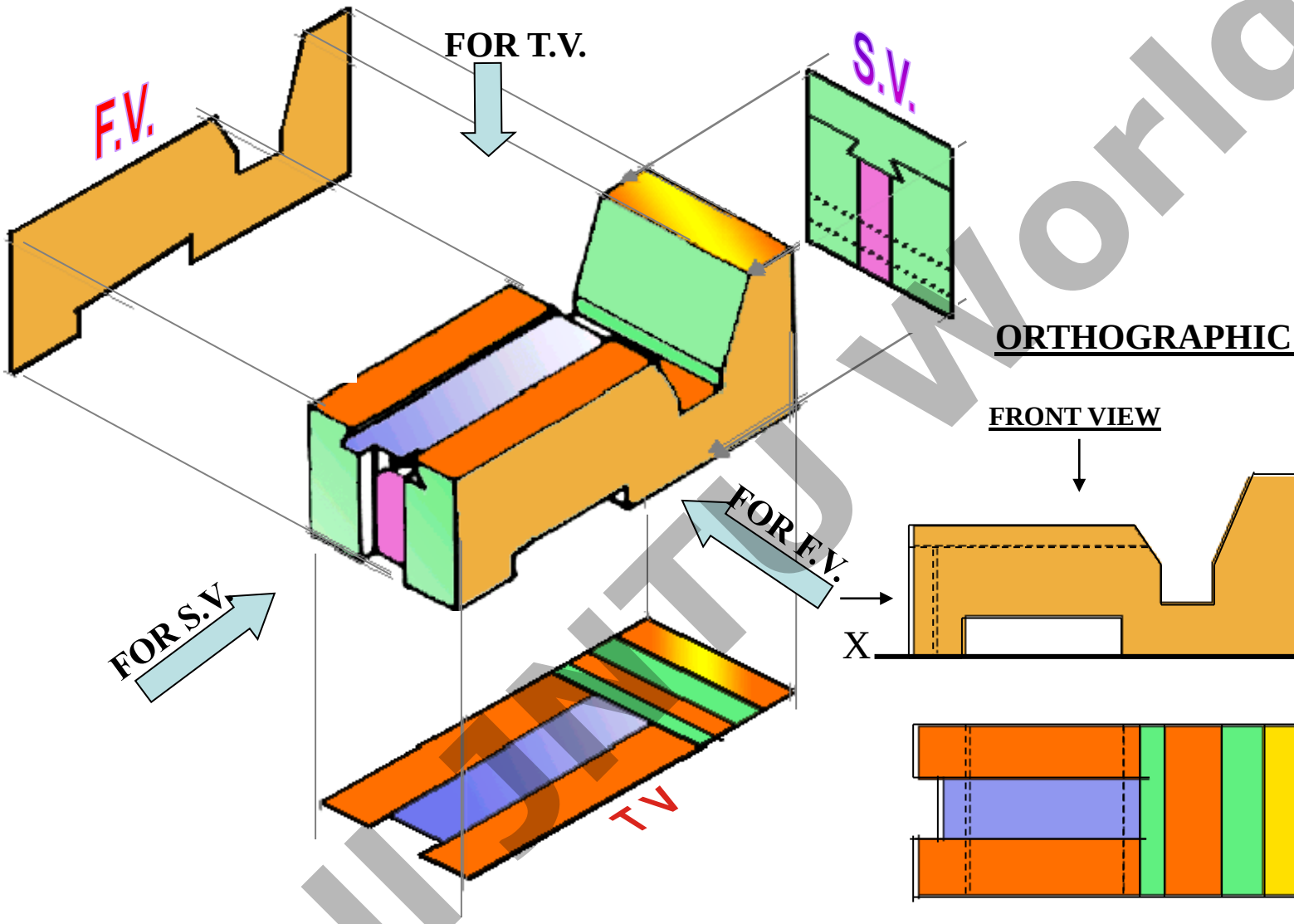

PICTORIAL PRESENTATION IS GIVEN

DRAW THREE VIEWS OF THIS OBJECT
BY FIRST ANGLE PROJECTION METHOD

www.FirstRanker.com
All JNTU World

FirstRanker.com
Firstranker's choice
www.FirstRanker.com www.FirstRanker.com

STUDY ILLUSTRATIONS

7

FOR T.V.

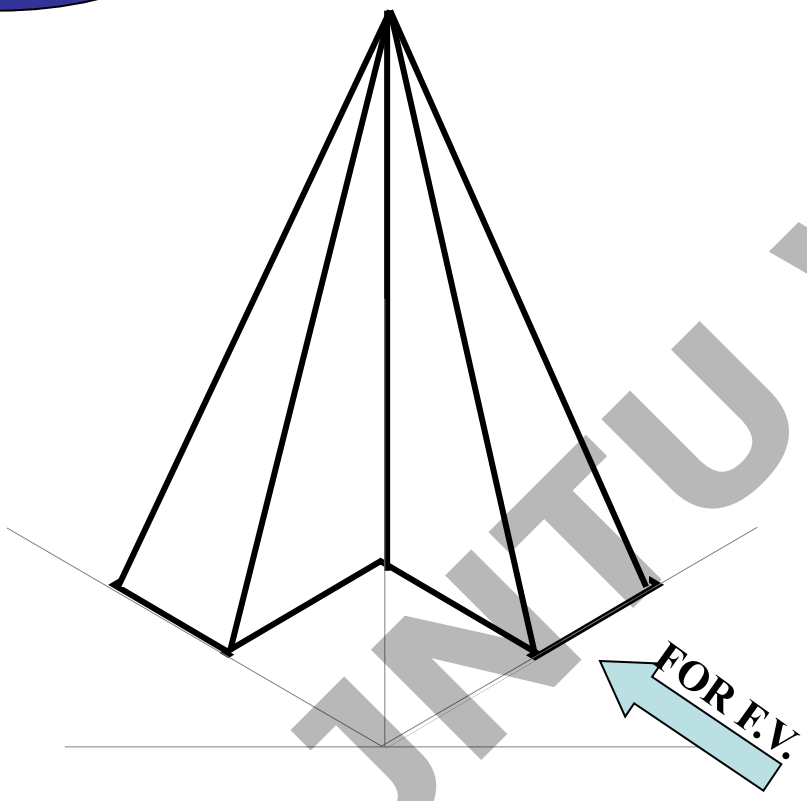

ORTHOGRAPHIC PROJEC

FRONT VIEW

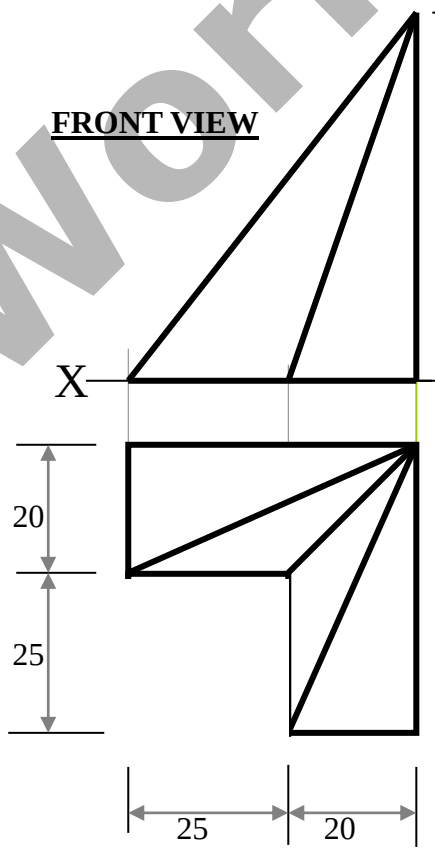

TOP VIEW

PICTORIAL PRESENTATION IS GIVEN

DRAW THREE VIEWS OF THIS OBJECT
BY FIRST ANGLE PROJECTION METHOD

All JNTU World
www.FirstRanker.com

FirstRanker.com
Firstranker's choice
www.FirstRanker.com www.FirstRanker.com

FOR T.V.

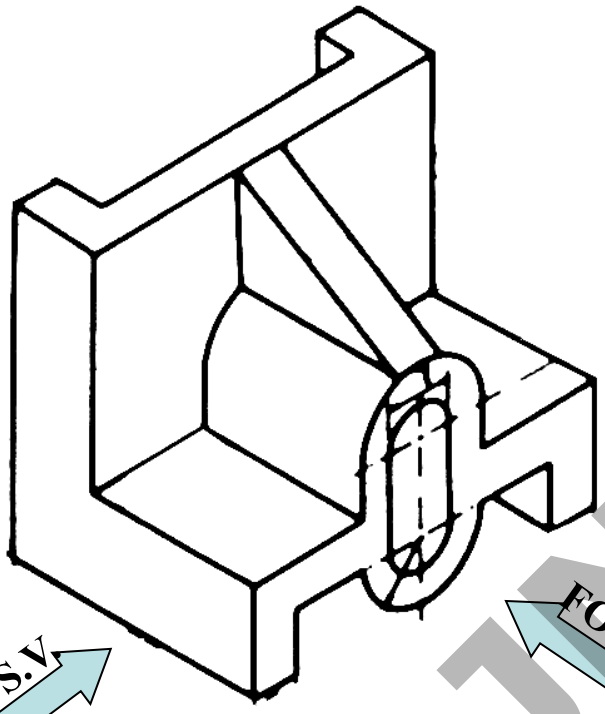

FOR S.V.

FOR F.V.

ORTHOGRAPHIC PROJEC

FRONT VIEW

L.H.

X

TOP VIEW

PICTORIAL PRESENTATION IS GIVEN

DRAW THREE VIEWS OF THIS OBJECT
BY FIRST ANGLE PROJECTION METHOD

www.FirstRanker.com
All JNTU World

FirstRanker.com
Firstranker's choice

ORTHOGRAPHIC PROJEC

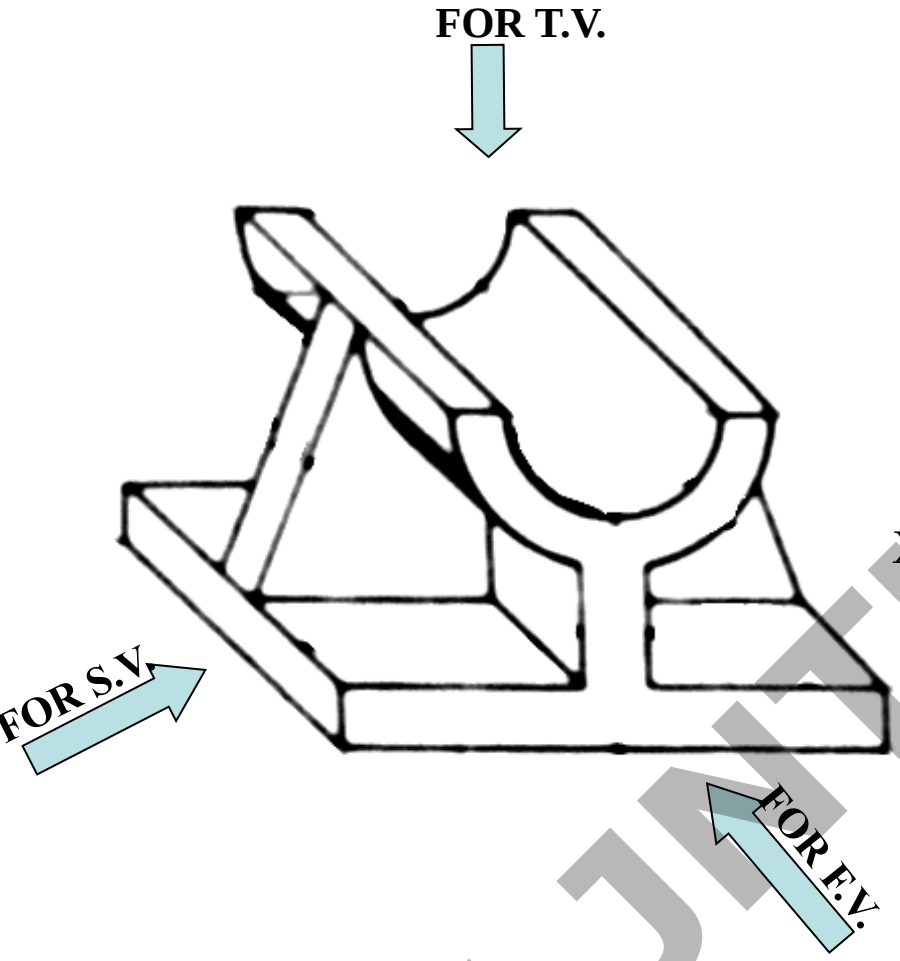

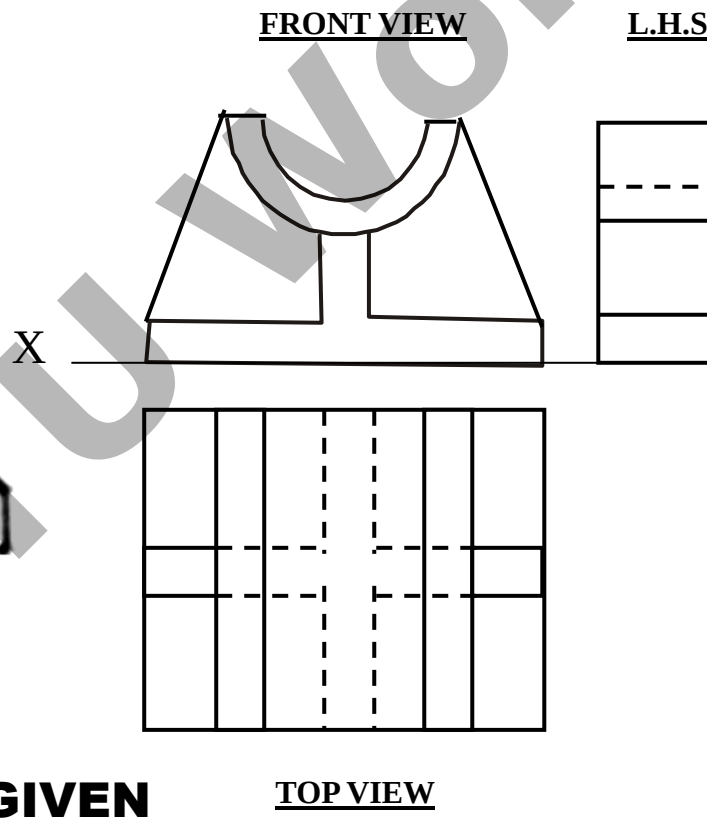

PICTORIAL PRESENTATION IS GIVEN

DRAW THREE VIEWS OF THIS OBJECT BY FIRST ANGLE PROJECTION METHOD

All JNTU World

FirstRanker.com
Firstranker's choice
www.FirstRanker.com www.FirstRanker.com

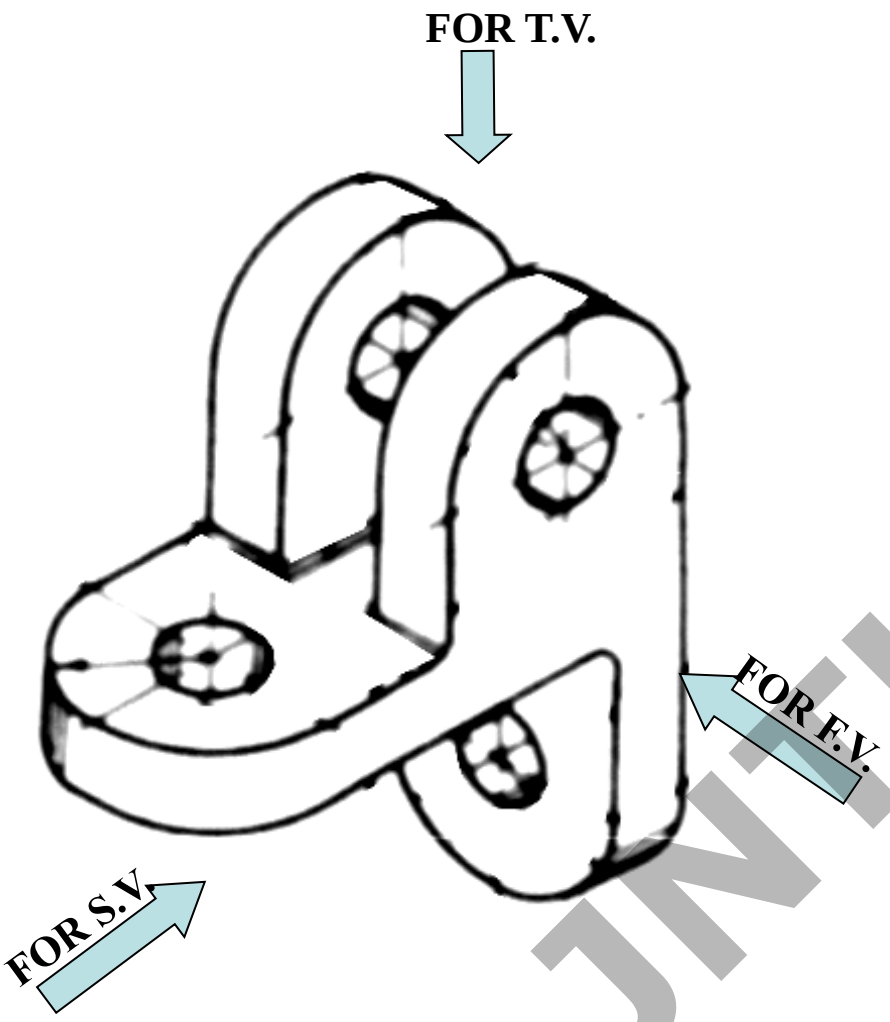

ORTHOGRAPHIC PROJECT

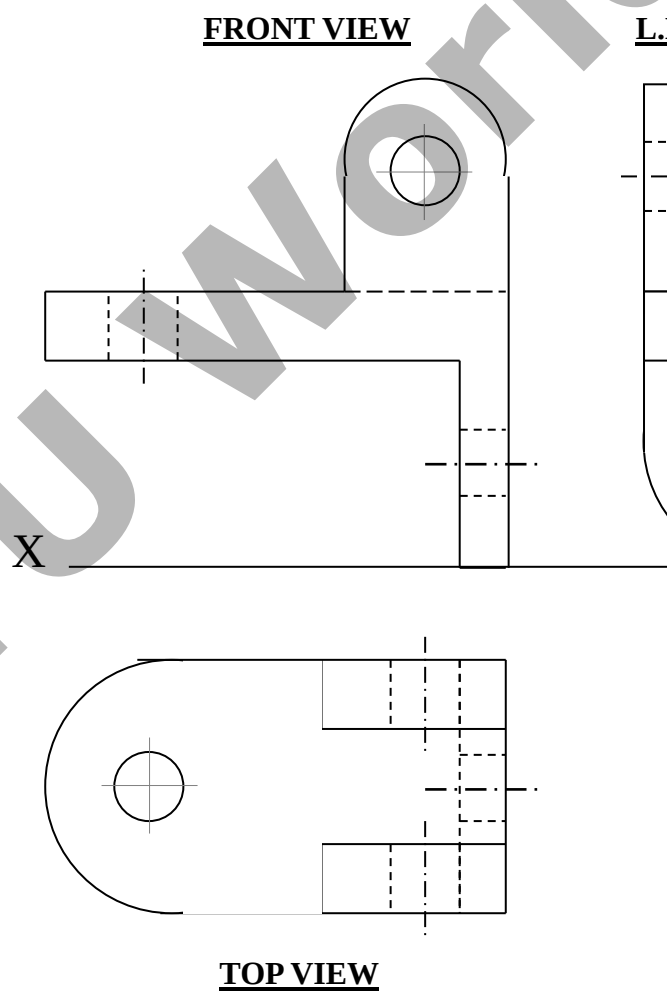

PICTORIAL PRESENTATION IS GIVEN

DRAW THREE VIEWS OF THIS OBJECT
BY FIRST ANGLE PROJECTION METHOD

All JNTU World
www.FirstRanker.com

FirstRanker.com
Firstranker's choice
www.FirstRanker.com www.FirstRanker.com

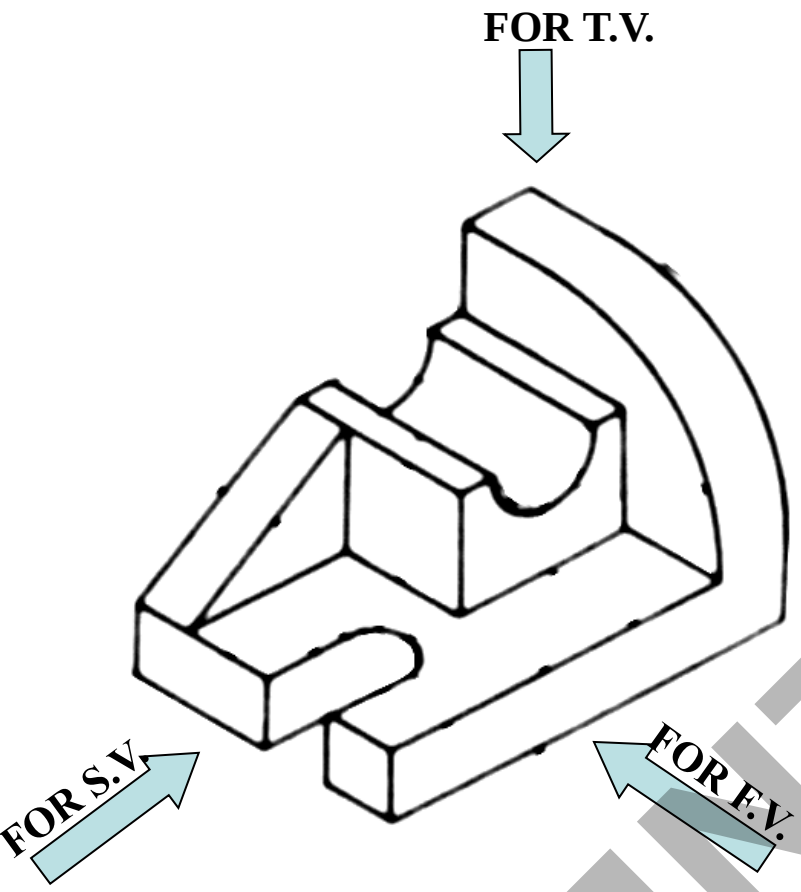

ORTHOGRAPHIC PR

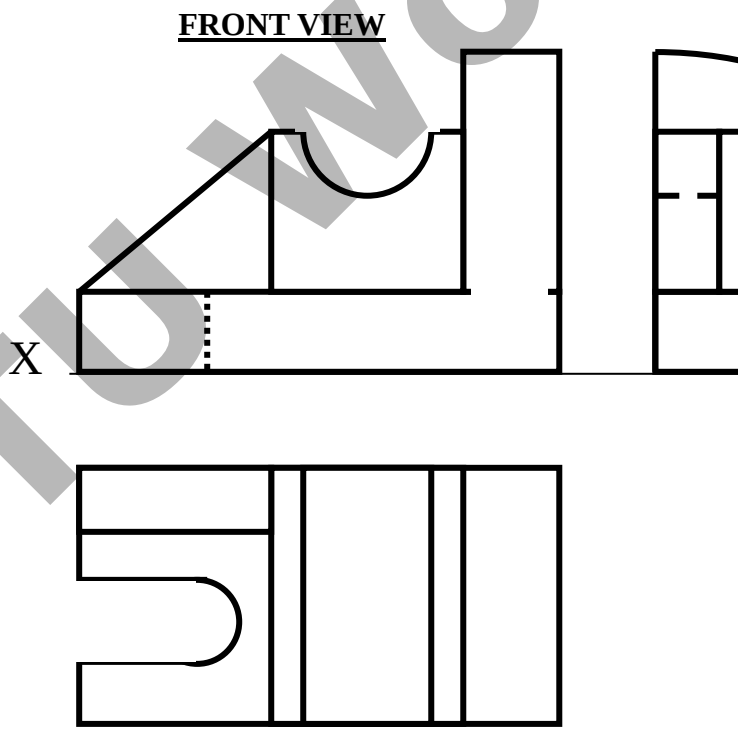

PICTORIAL PRESENTATION IS GIVEN

DRAW THREE VIEWS OF THIS OBJECT BY FIRST ANGLE PROJECTION METHOD

AllJNTUWorld

www.FirstRanker.com

FirstRanker.com
Firstranker's choice
www.FirstRanker.com www.FirstRanker.com

STUDY ILLUSTRATIONS

7

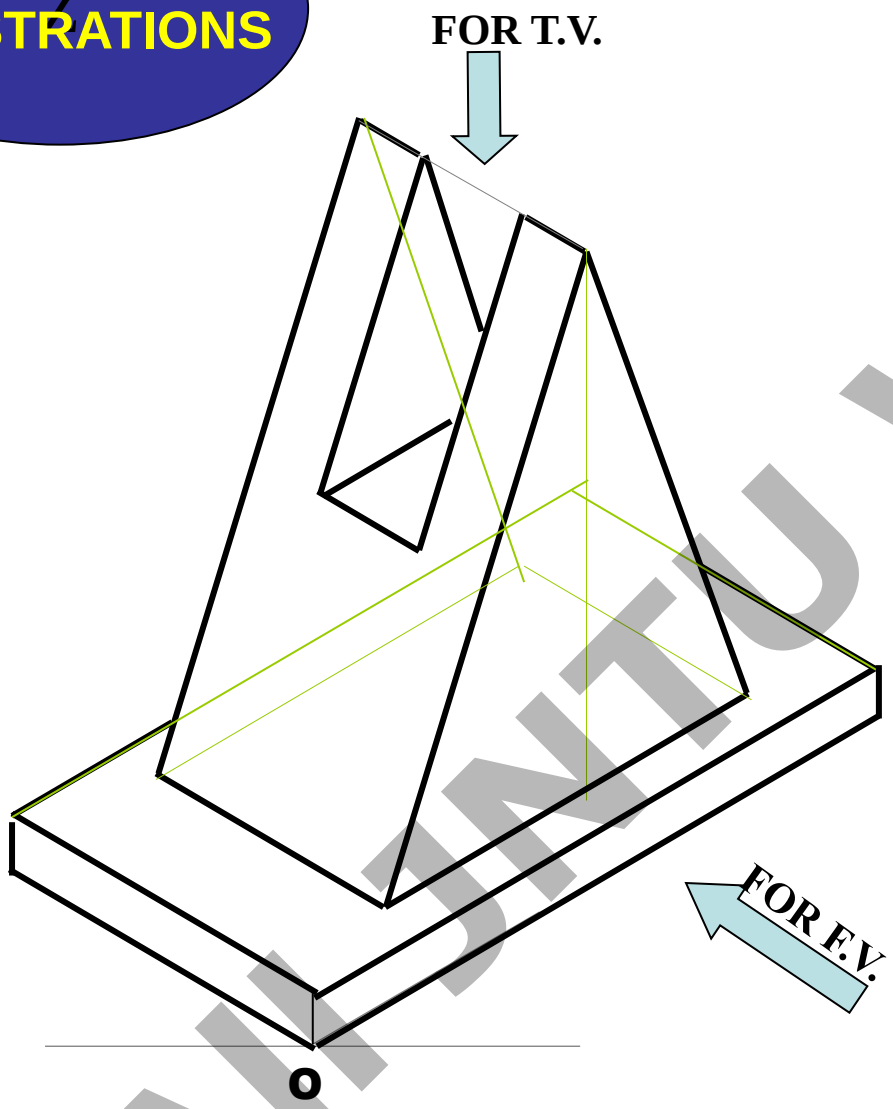

ORTHOGRAPHIC PROJ

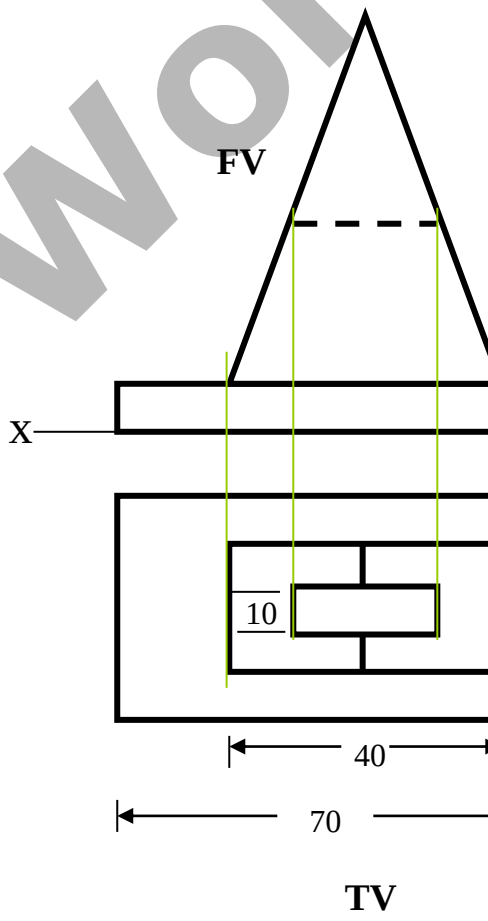

PICTORIAL PRESENTATION IS GIVEN

DRAW FV AND TV OF THIS OBJECT BY FIRST ANGLE PROJECTION METHOD

www.FirstRanker.com
All JNTU World

FirstRanker.com
Firstranker's choice
www.FirstRanker.com www.FirstRanker.com

STUDY ILLUSTRATIONS

FOR T.V.

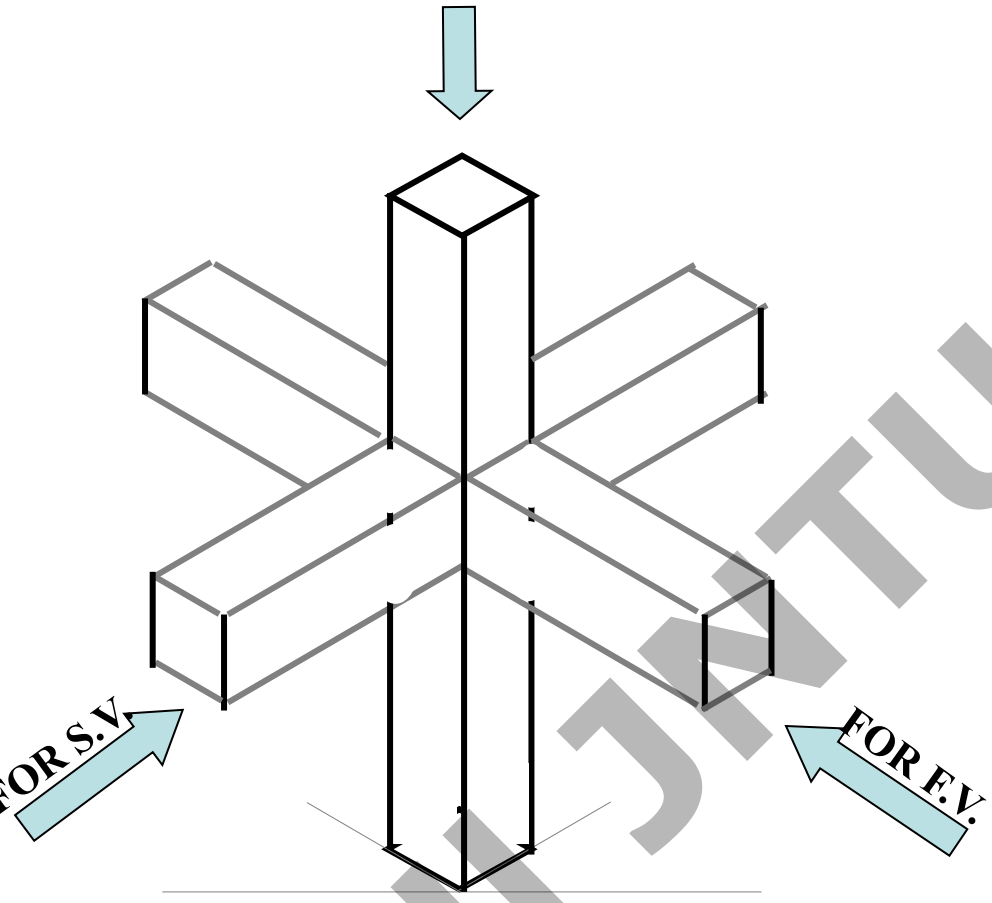

ORTHOGRAPHIC PR

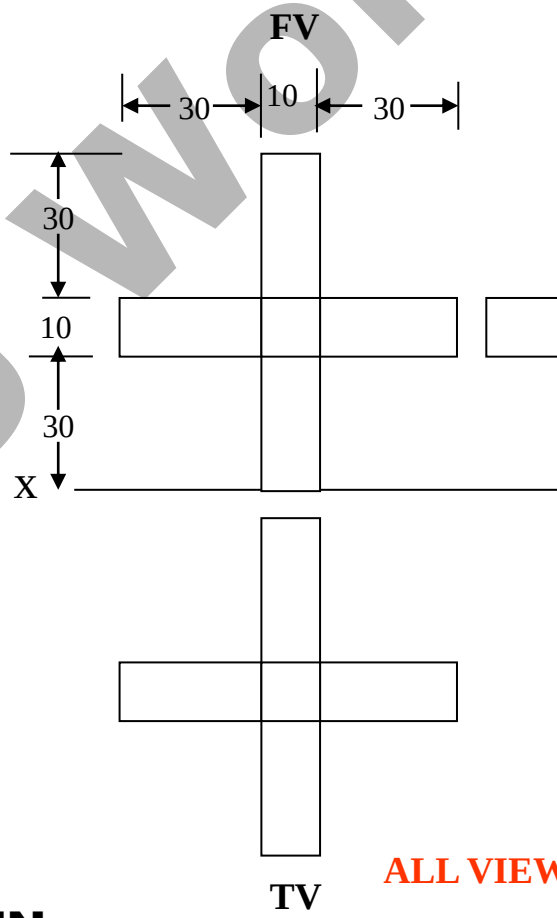

ALL VIEW

PICTORIAL PRESENTATION IS GIVEN

DRAW THREE VIEWS OF THIS OBJECT BY FIRST ANGLE PROJECTION METHOD

All JNTU World
www.FirstRanker.com

FirstRanker.com
Firstranker's choice
www.FirstRanker.com www.FirstRanker.com

STUDY ILLUSTRATIONS

7

ORTHOGRAPHIC PROJE

ALL VIEWS IDENTICA

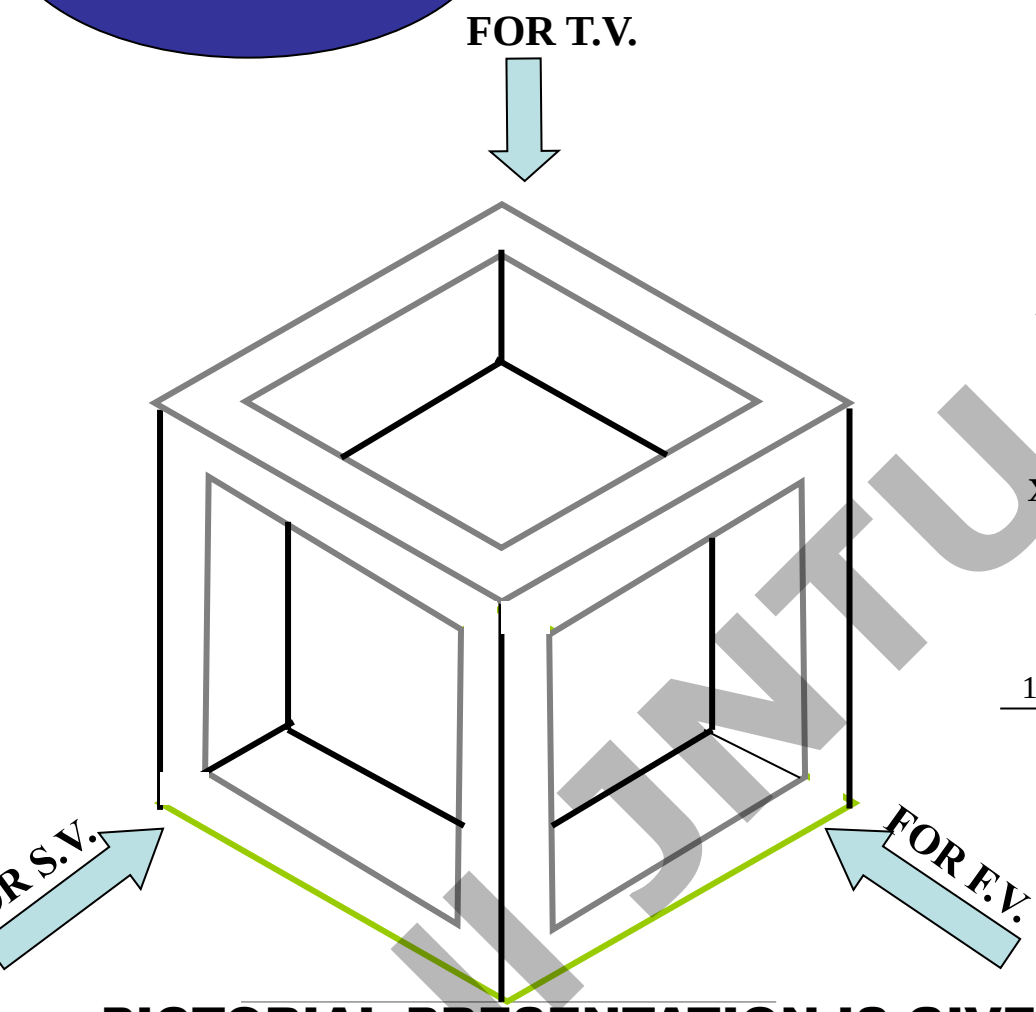

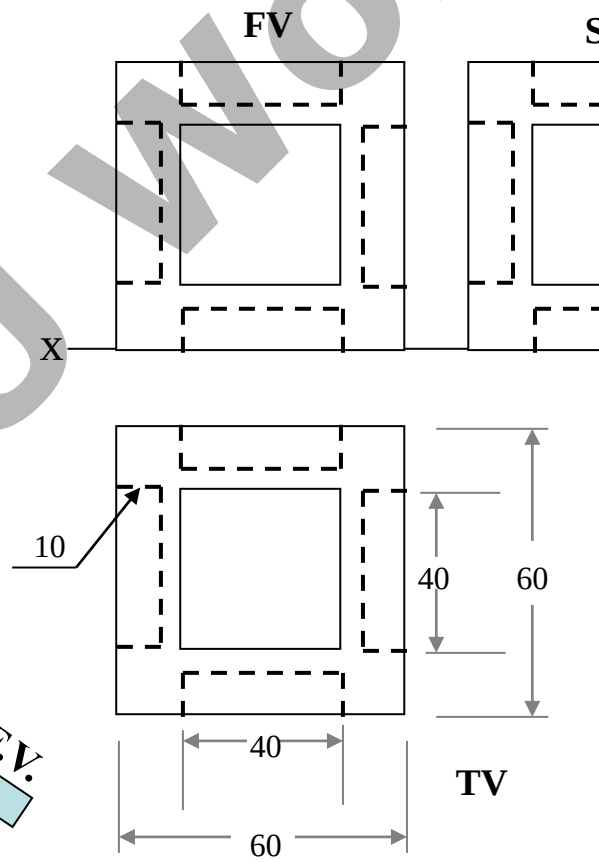

PICTORIAL PRESENTATION IS GIVEN

DRAW THREE VIEWS OF THIS OBJECT
BY FIRST ANGLE PROJECTION METHOD

All JNTU World
www.FirstRanker.com

FirstRanker.com
Firstranker's choice
www.FirstRanker.com www.FirstRanker.com

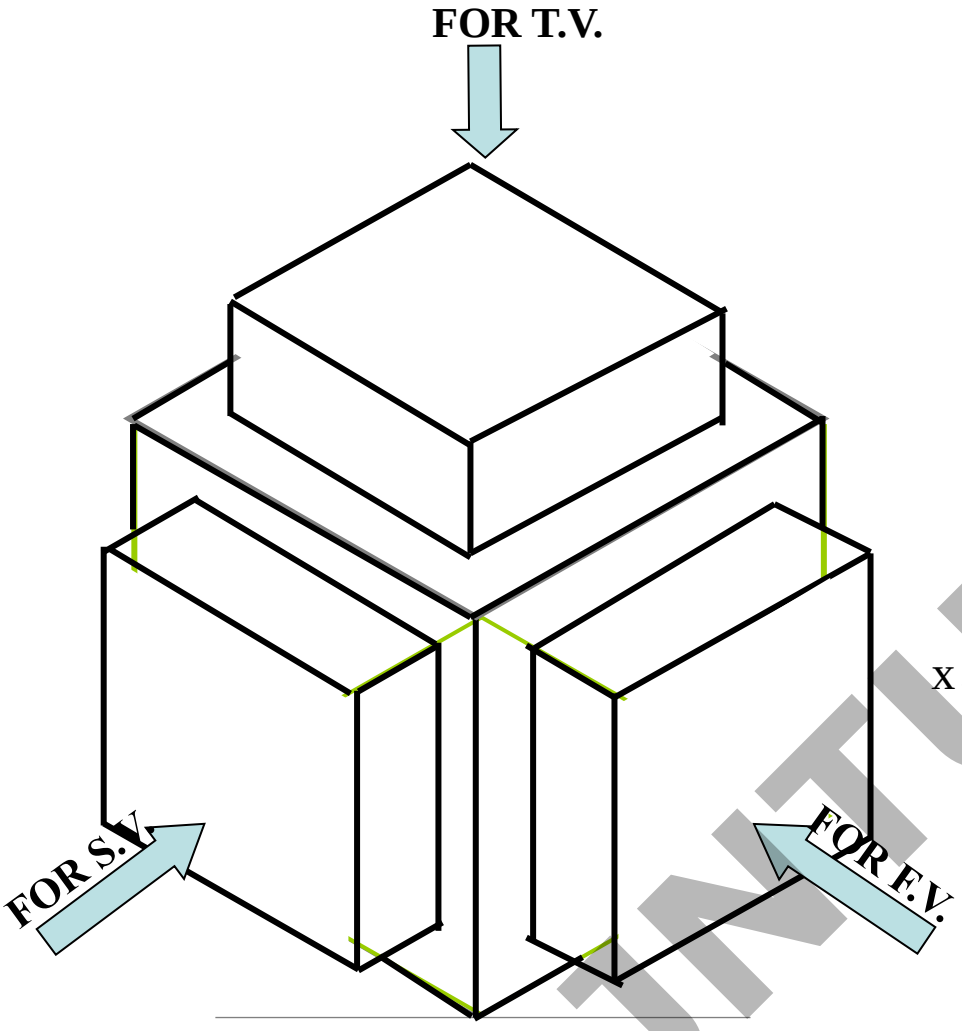

ORTHOGRAPHIC PROJECTI

ALL VIEWS IDENTICA

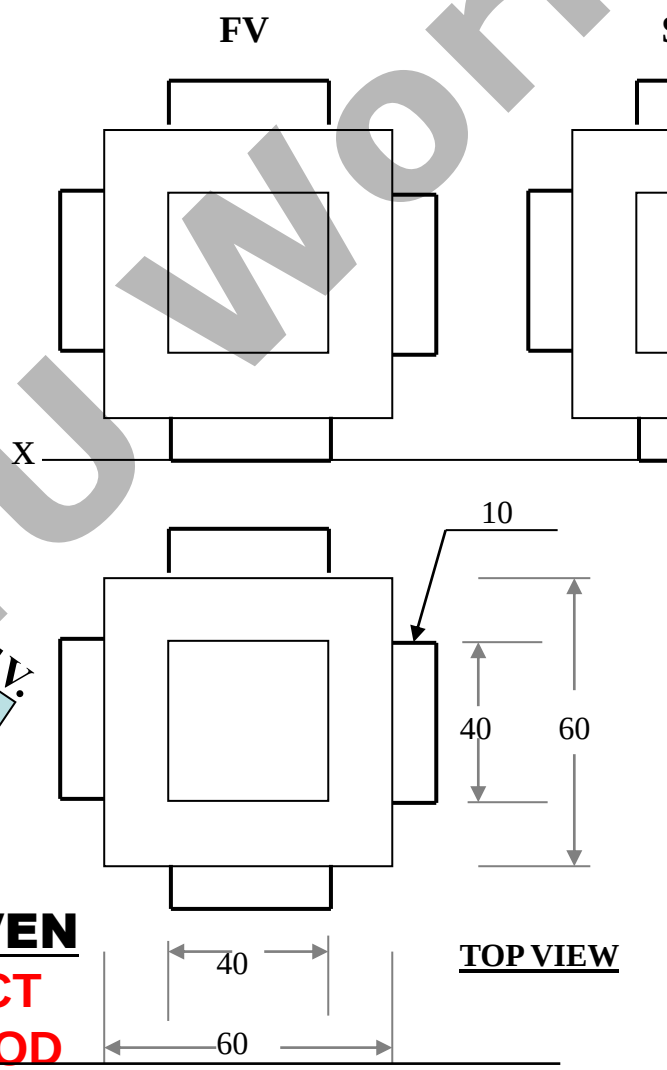

PICTORIAL PRESENTATION IS GIVEN

DRAW THREE VIEWS OF THIS OBJECT BY FIRST ANGLE PROJECTION METHOD

All JNTU World

www.FirstRanker.com

FirstRanker.com
Firstranker's choice
www.FirstRanker.com www.FirstRanker.com

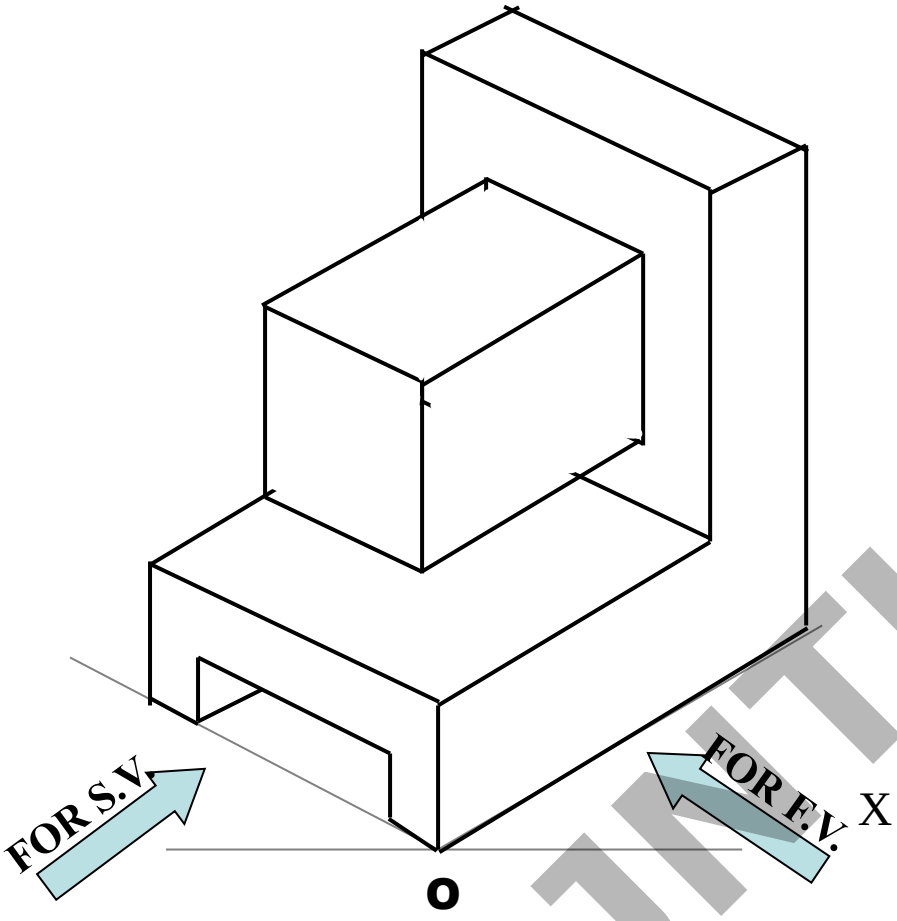

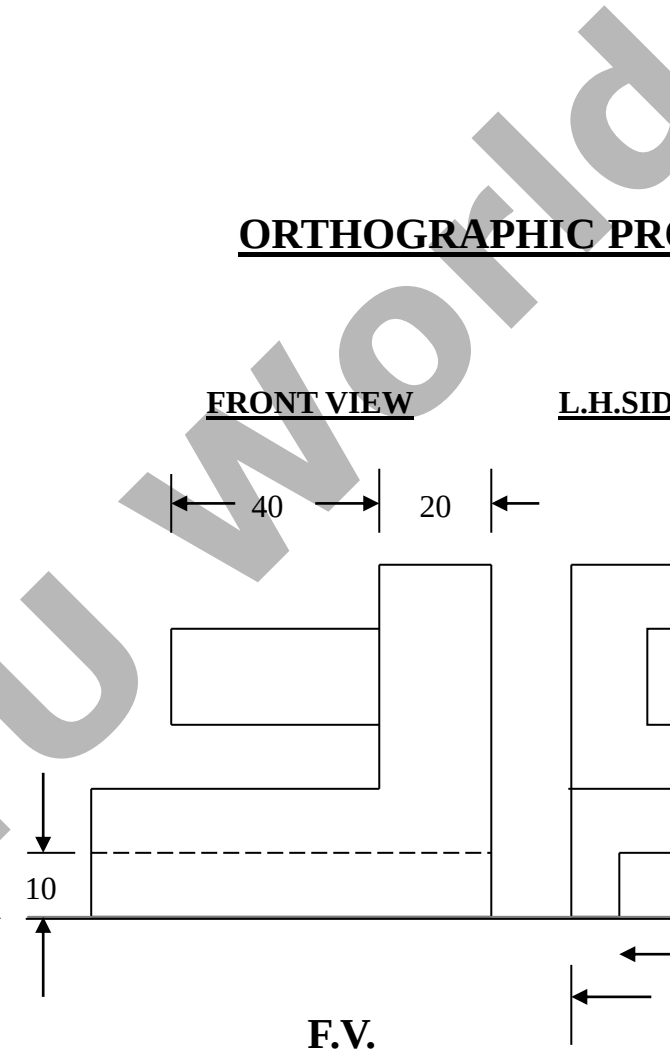

PICTORIAL PRESENTATION IS GIVEN

DRAW FV AND SV OF THIS OBJECT
BY FIRST ANGLE PROJECTION METHOD

All JNTU World

www.FirstRanker.com

FirstRanker.com
Firstranker's choice
www.FirstRanker.com www.FirstRanker.com

ORTHOGRAPHIC PROJECTIONS

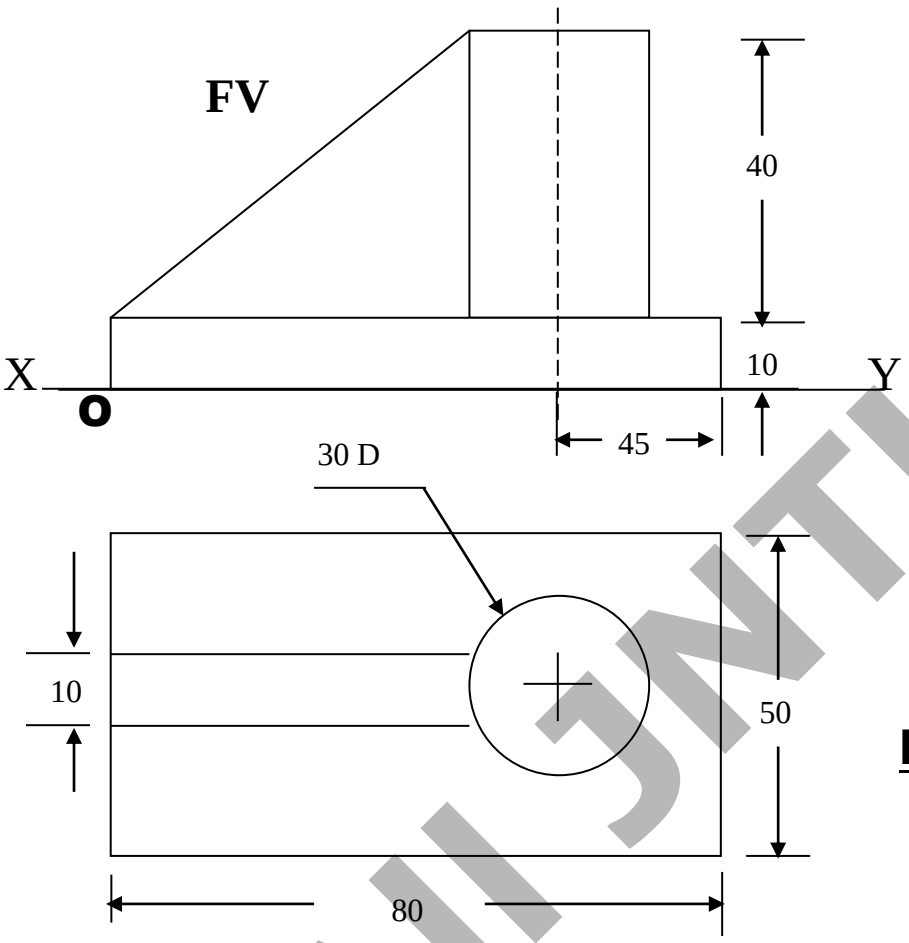

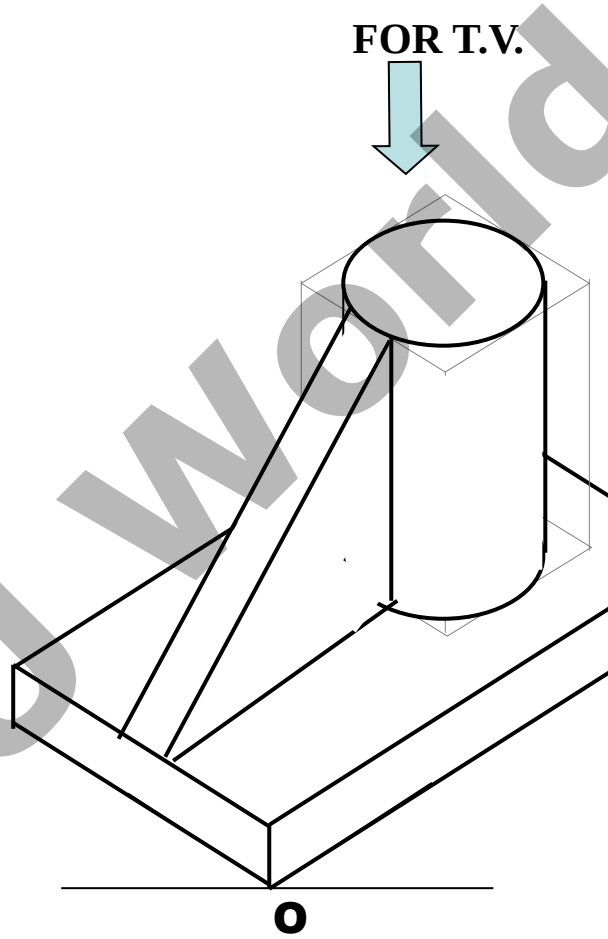

PICTORIAL PRESENTATIO

DRAW FV AND TV OF THIS
BY FIRST ANGLE PROJECTI

All JNTU World

www.FirstRanker.com

FirstRanker.com
Firstranker's choice

ORTHOGRAPHIC PROJECTIONS

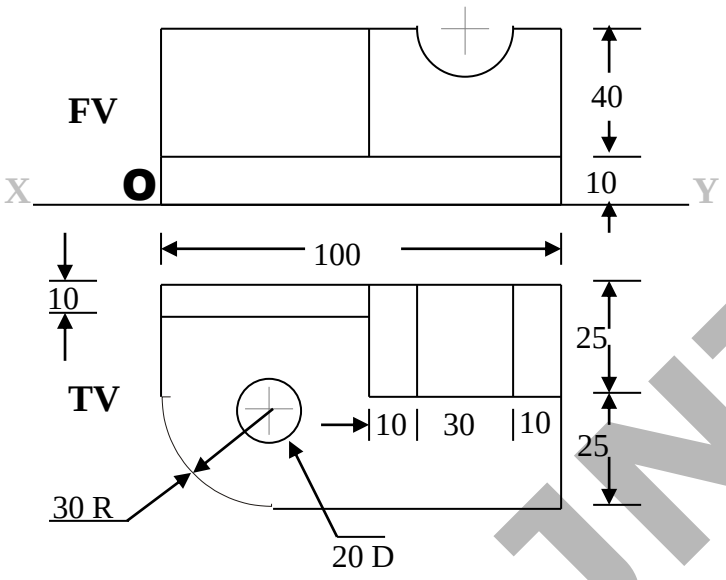

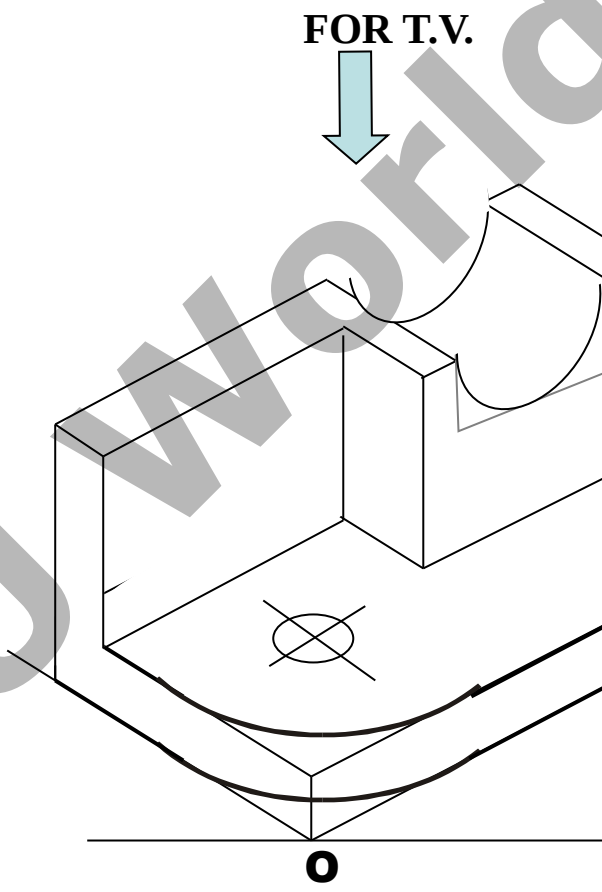

PICTORIAL PRESENTATION

DRAW FV AND TV OF THIS O
BY FIRST ANGLE PROJECTION

All JNTU World

FirstRanker.com
Firstranker's choice
www.FirstRanker.com www.FirstRanker.com

PICTORIAL PRESENTATION IS GIVEN

DRAW FV AND TV OF THIS OBJECT BY FIRST ANGLE PROJECTION METHOD

ORTHOGRAPHIC PROJEC

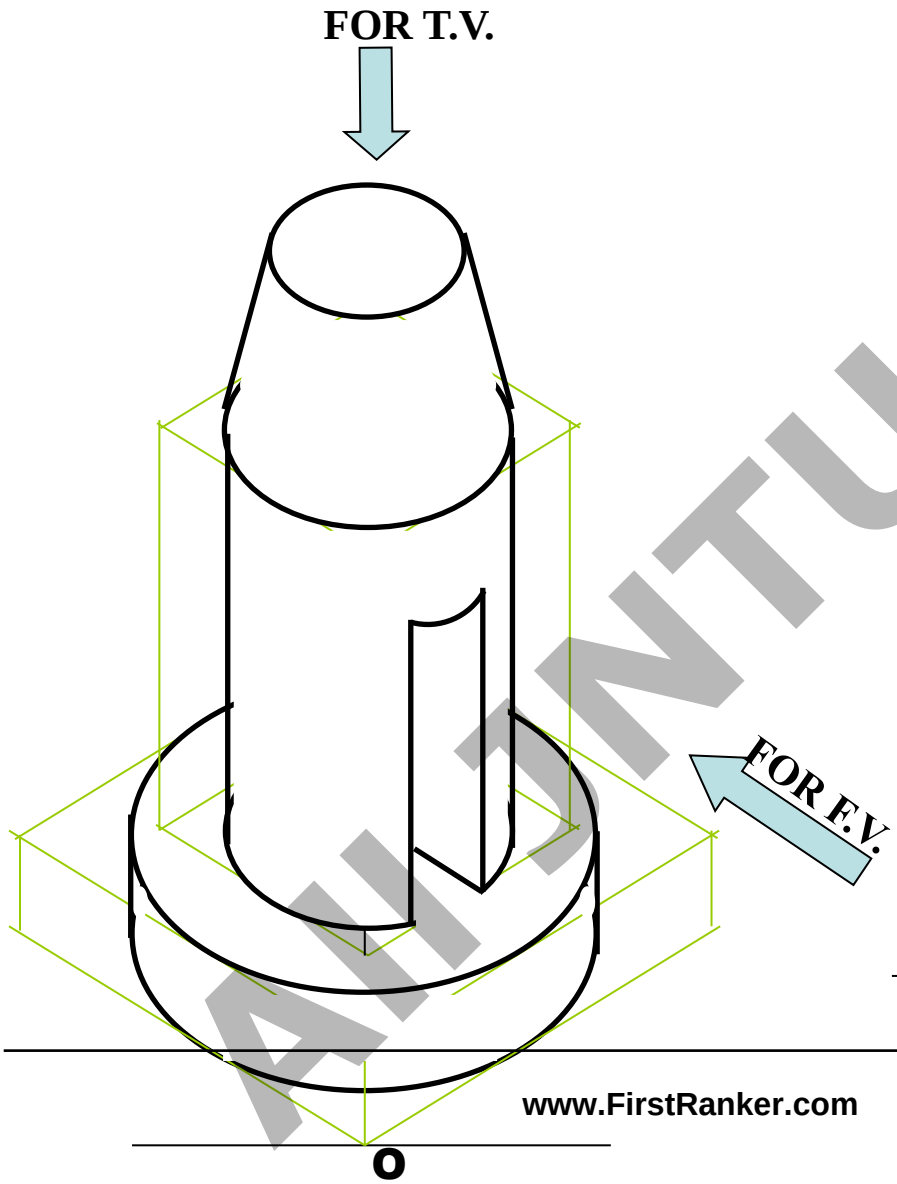

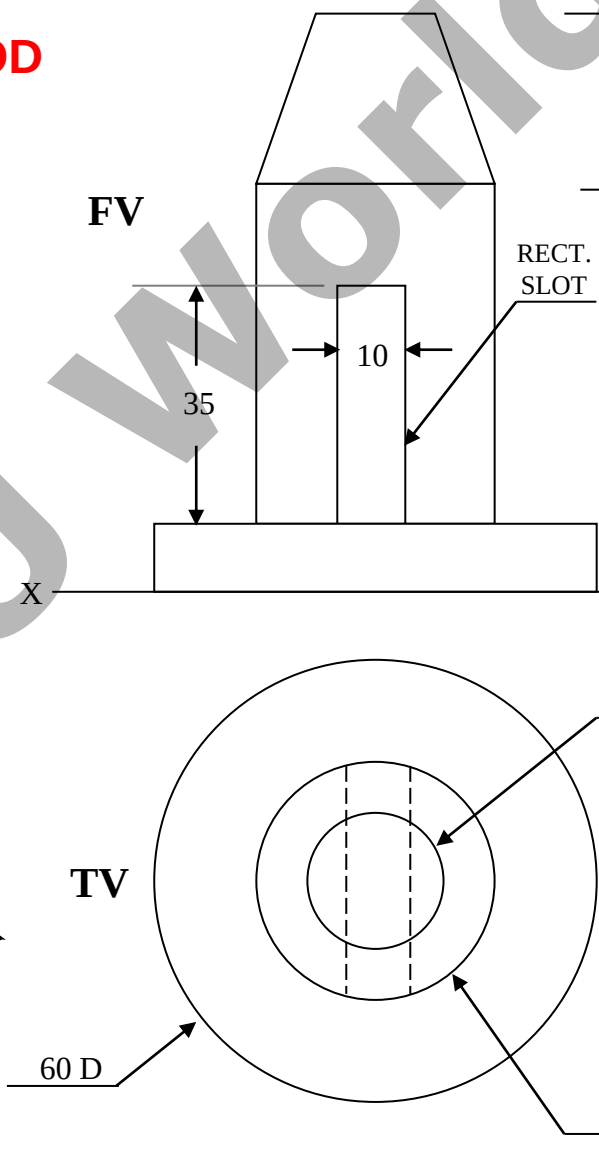

AllJNTU World
www.FirstRanker.com

FirstRanker.com
Firstranker's choice
www.FirstRanker.com www.FirstRanker.com

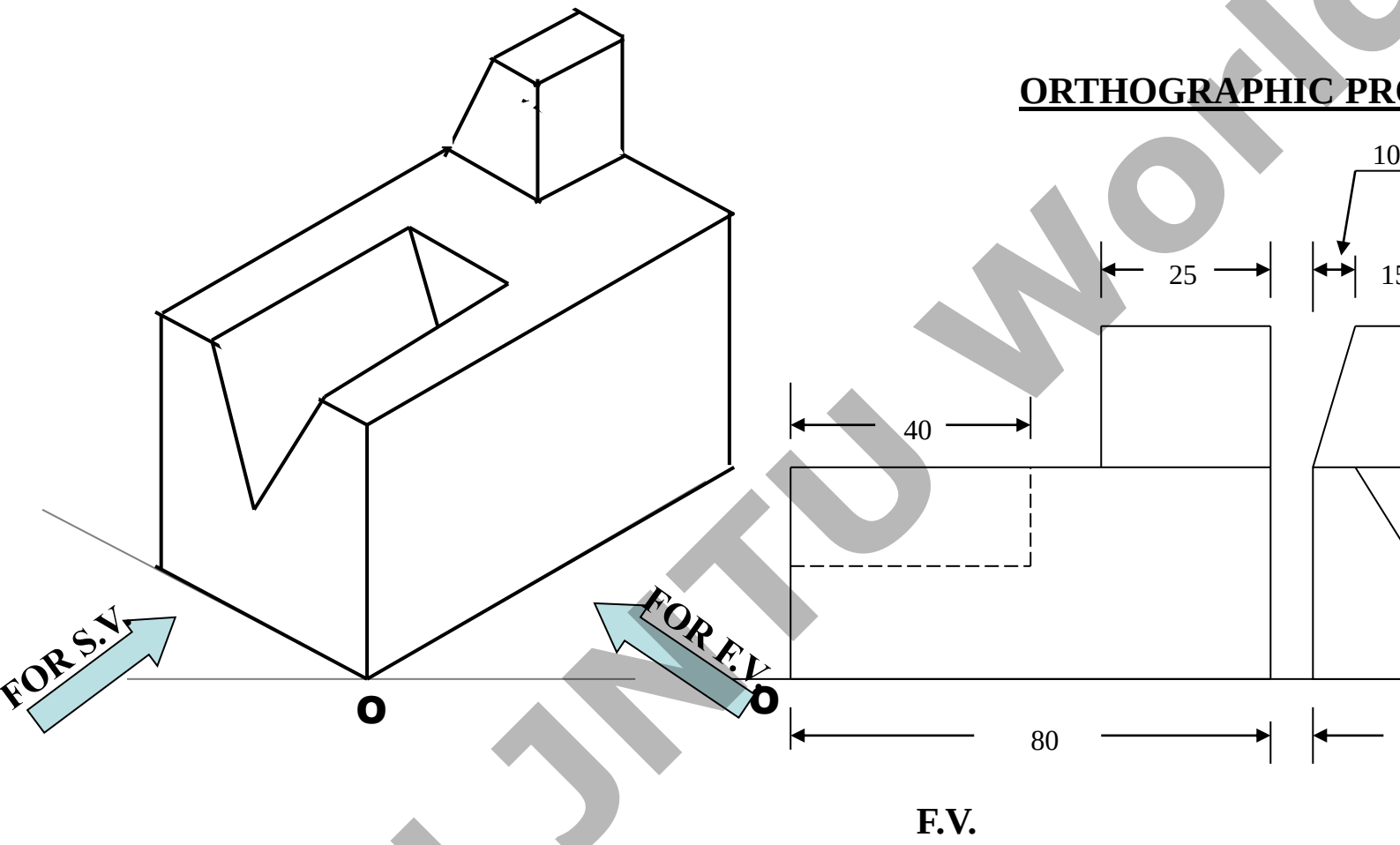

PICTORIAL PRESENTATION IS GIVEN

DRAW FV AND SV OF THIS OBJECT
BY FIRST ANGLE PROJECTION METHOD

www.FirstRanker.com
All JNTU World

FirstRanker.com
Firstranker's choice
www.FirstRanker.com www.FirstRanker.com

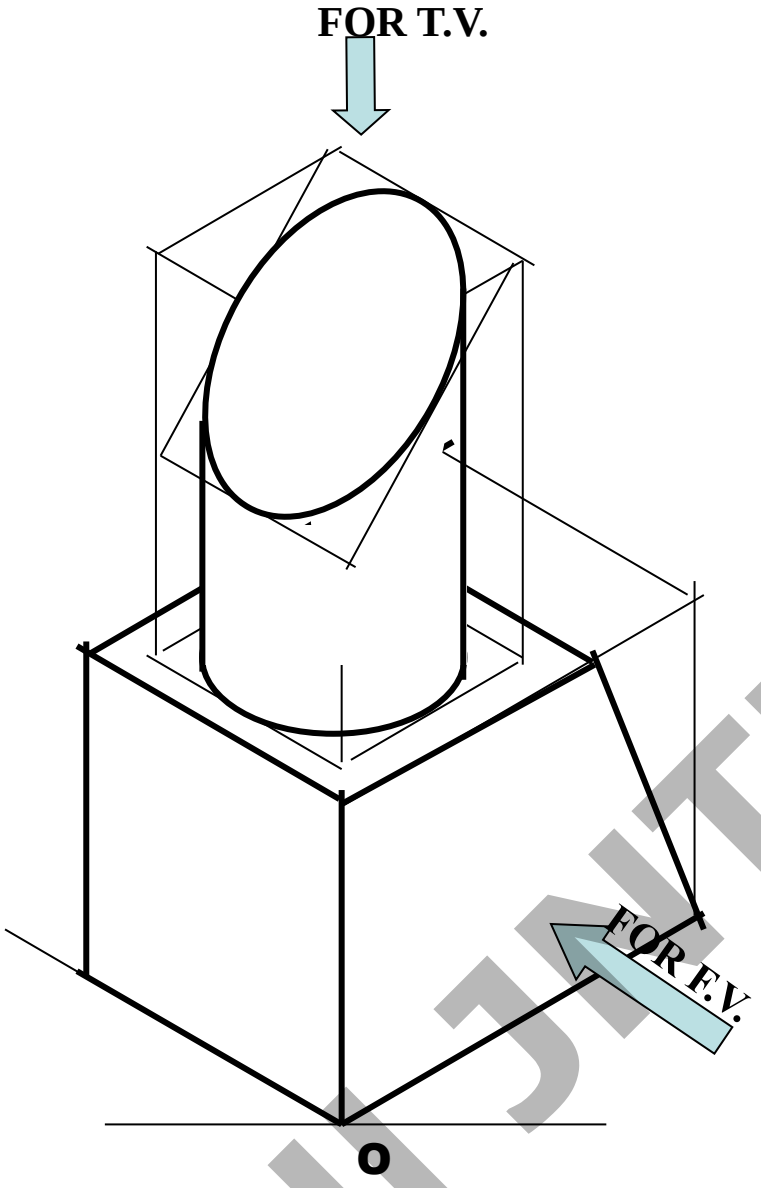

ORTHOGRAPHIC PROJE

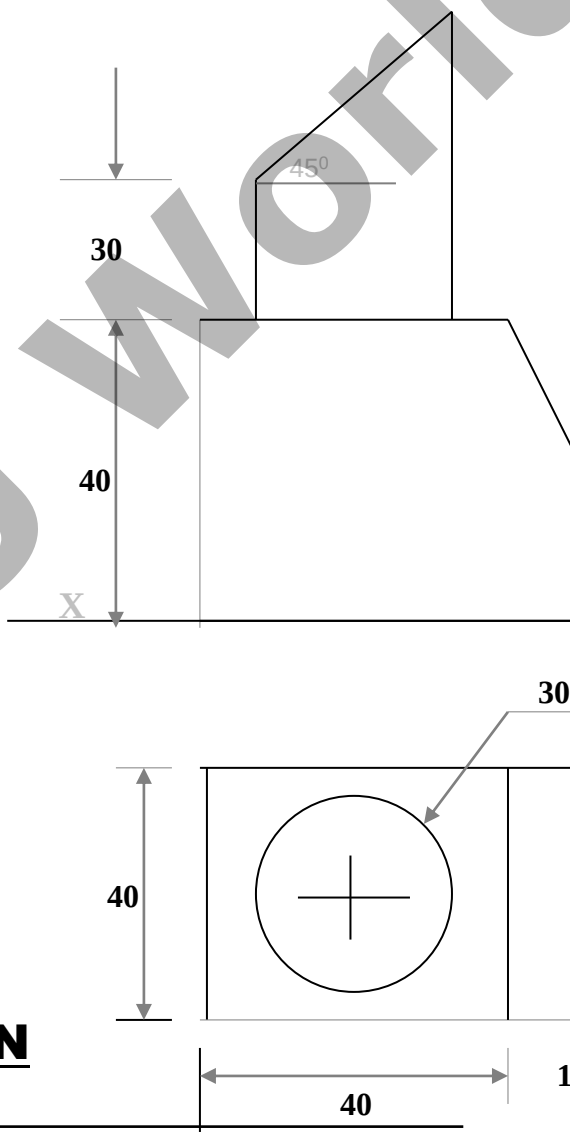

PICTORIAL PRESENTATION IS GIVEN

DRAW FV AND TV OF THIS OBJECT

BY FIRST ANGLE PROJECTION METHOD

All JNTU World
www.FirstRanker.com

FirstRanker.com
Firstranker's choice
www.FirstRanker.com www.FirstRanker.com

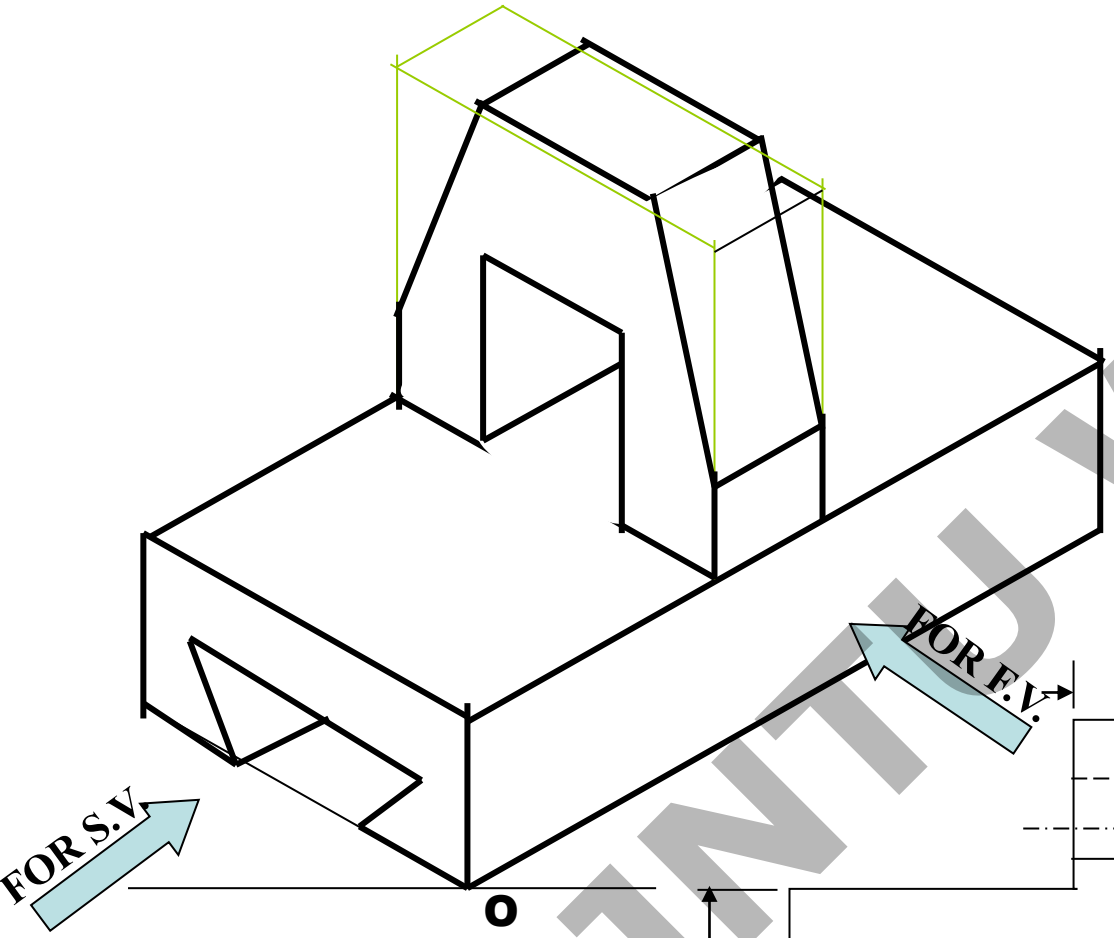

ORTHOGRAPHIC P

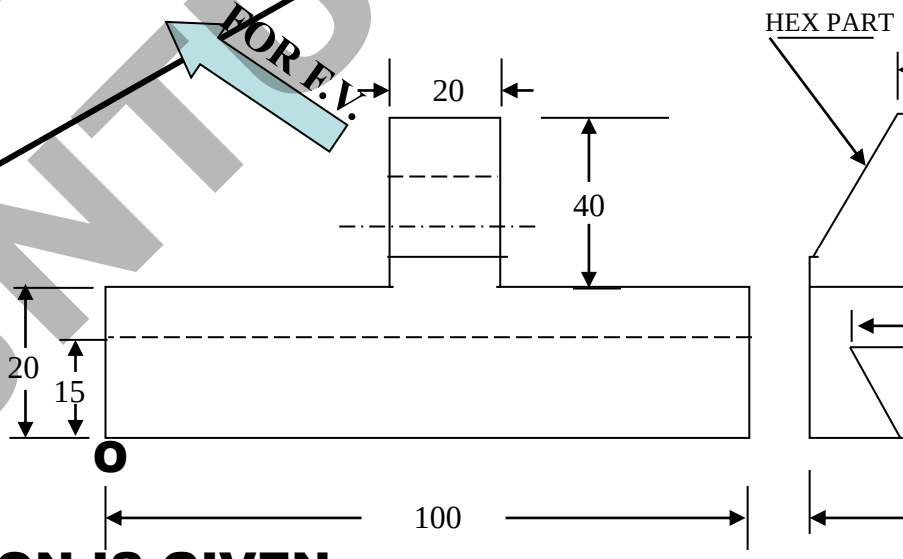

FRONT VIEW

L.

PICTORIAL PRESENTATION IS GIVEN

DRAW FV ABD SV OF THIS OBJECT
BY FIRST ANGLE PROJECTION METHOD

www.FirstRanker.com
All JNTU World

FirstRanker.com
Firstranker's choice
www.FirstRanker.com www.FirstRanker.com

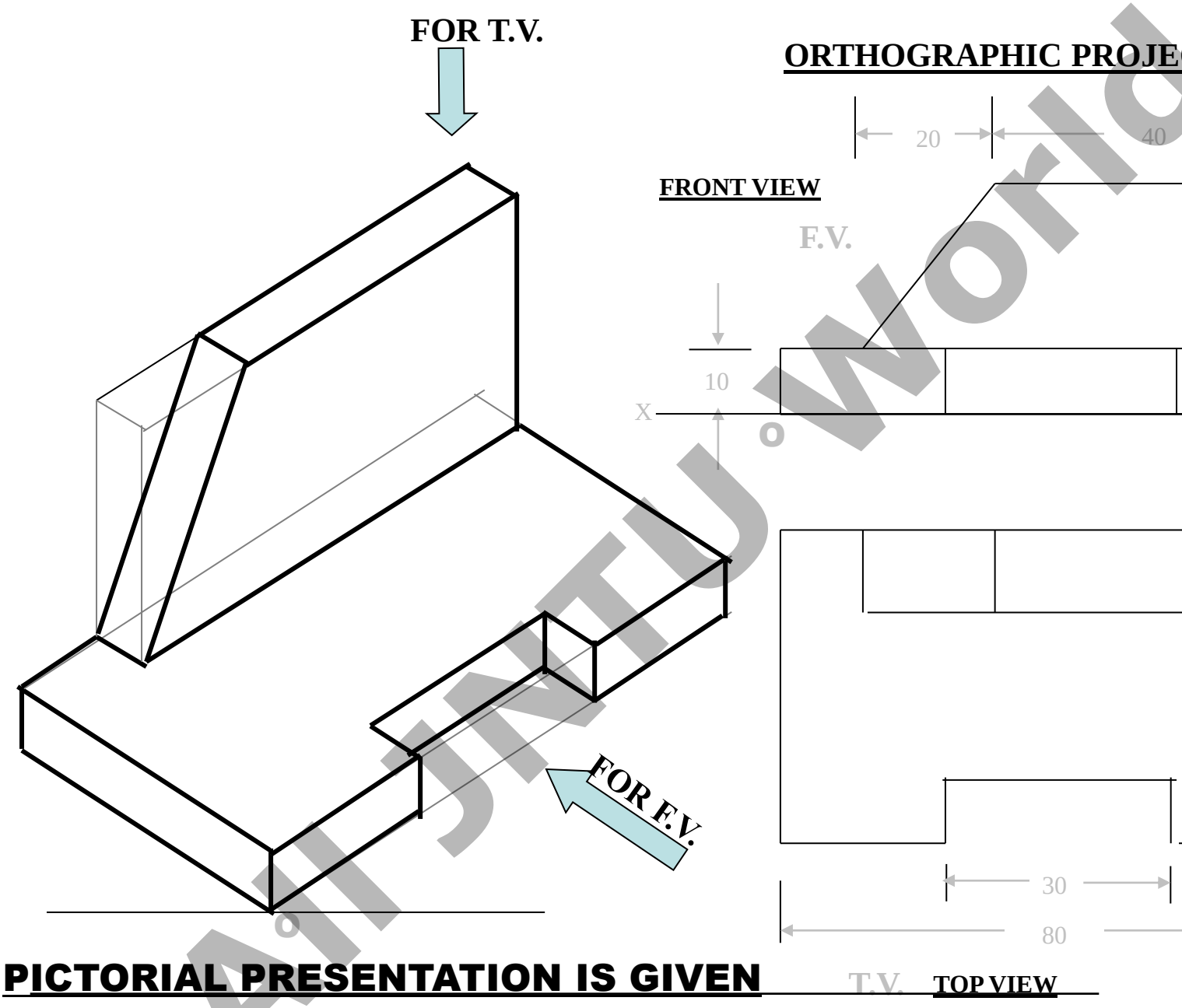

All JNTU World

PICTORIAL PRESENTATION IS GIVEN

DRAW FV AND TV OF THIS OBJECT
BY FIRST ANGLE PROJECTION METHOD

www.FirstRanker.com

FirstRanker.com
Firstranker's choice
www.FirstRanker.com www.FirstRanker.com

ORTHOGRAPHIC PROJECTIONS

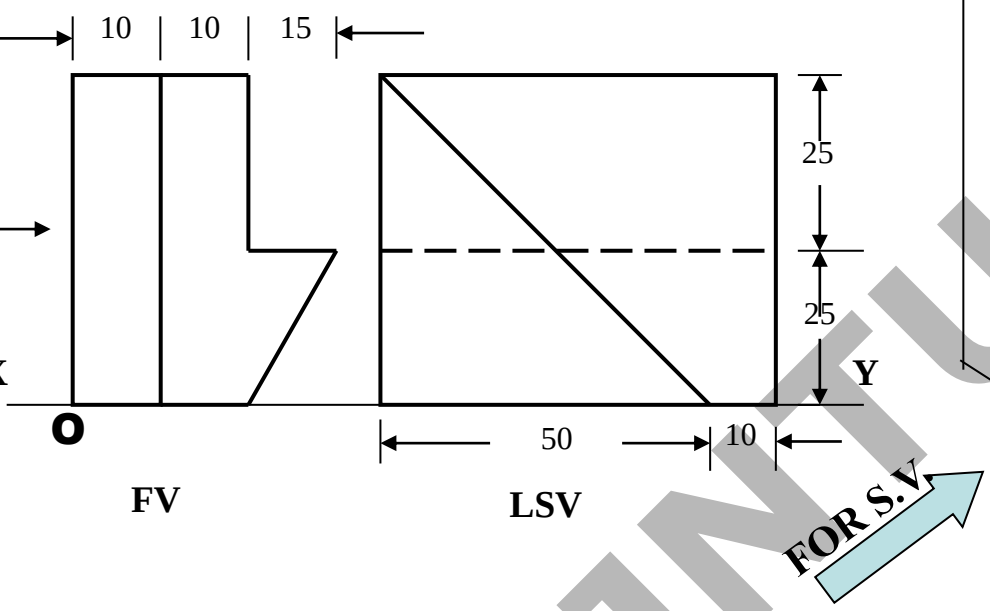

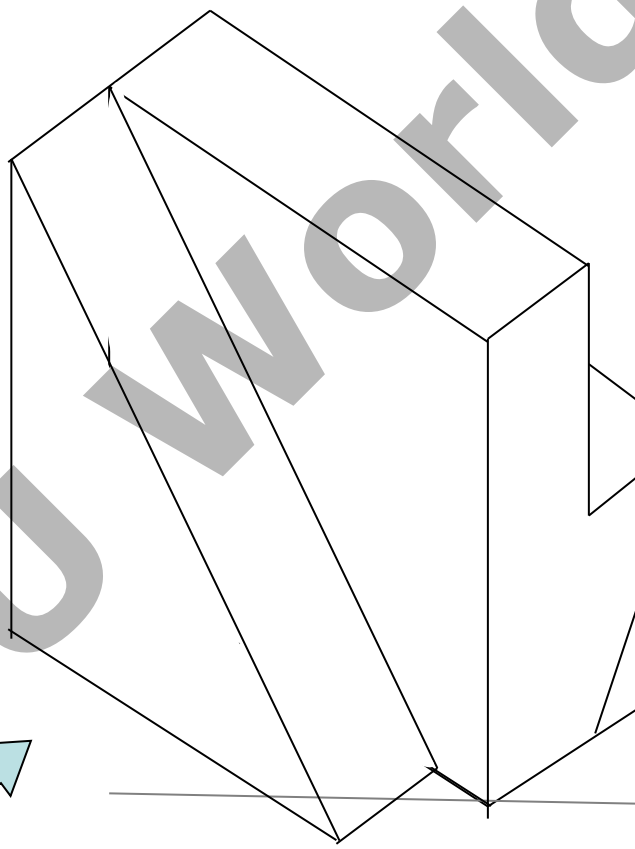

PICTORIAL PRESENTATION IS

DRAW FV AND LSV OF THIS OB

BY FIRST ANGLE PROJECTION M

All JNTU World

www.FirstRanker.com

FirstRanker.com
Firstranker's choice
www.FirstRanker.com www.FirstRanker.com

26

PICTORIAL PRESENTATION

DRAW FV AND SV OF THIS O
BY FIRST ANGLE PROJECTIO

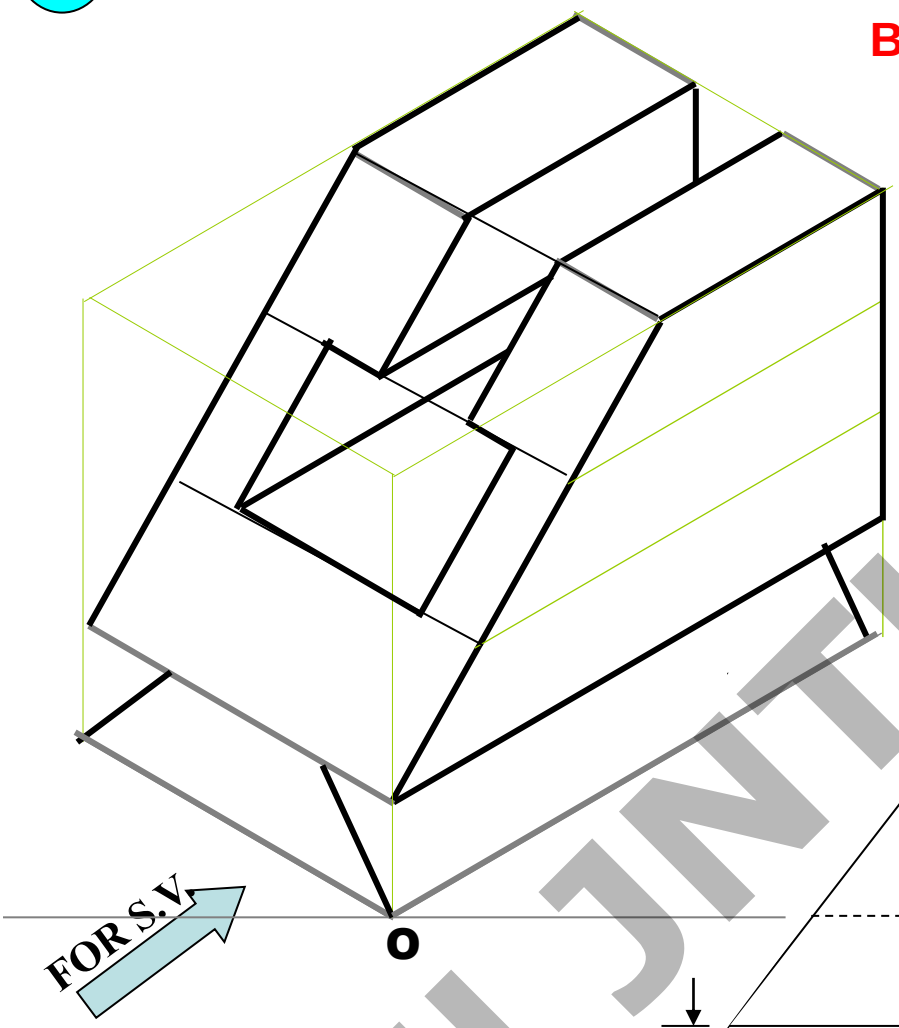

ORTHOGRAPHIC PRO

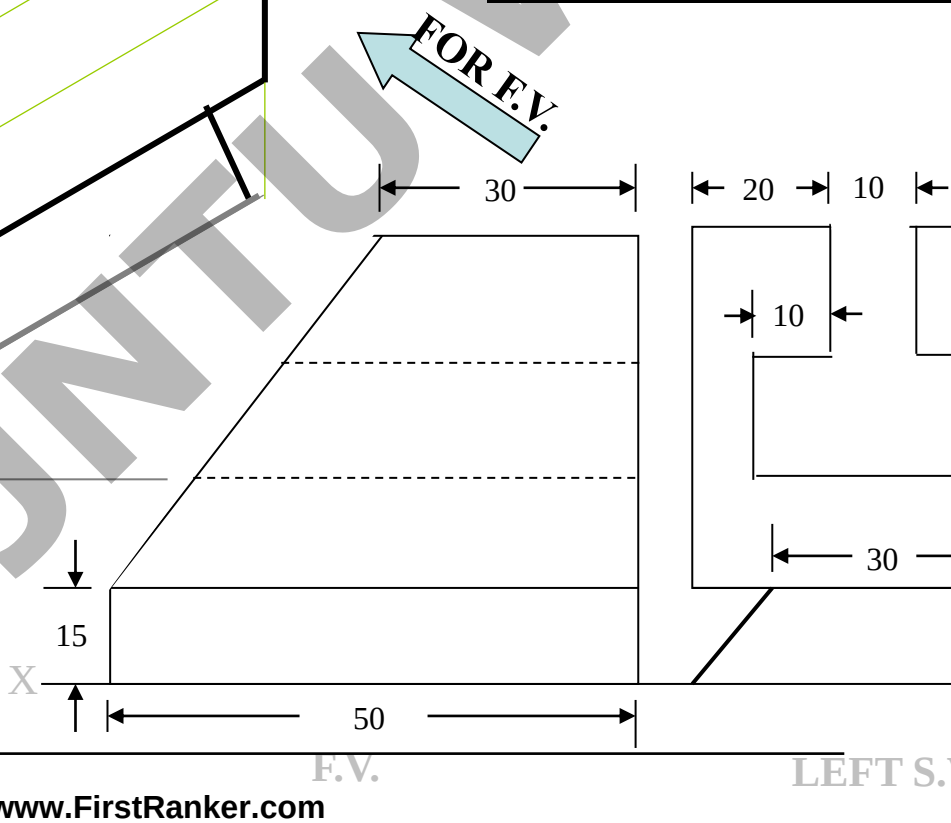

All JNTU World

www.FirstRanker.com