Code No: 07A50206 **R07** **Set No. 2**

III B.Tech I Semester Examinations,May 2011
LINEAR SYSTEMS ANALYSIS
Electrical And Electronics Engineering

Time: 3 hours **Max Marks: 80**

Answer any FIVE Questions
All Questions carry equal marks

⋆⋆⋆⋆⋆

1. Define convolution integral. With an example explain how convolution of a signal can be obtained graphically. [16]

2. (a) Explain the procedure by which the impedance function can be synthesized using Cauer form II.
   (b) Using the Cauer form II, synthesize the LC impedance function $Z(s) = \frac{s(s^2+4)(s^2+6)}{(s^2+3)(s^2+5)}$ [8+8]

3. Determine the z- transform , including the region of convergence, for each of the following sequences :
   (a) $(1/2)^n$ u(n)
   (b) $-(1/2)^n$ u(-n-1)
   (c) $(1/2)^n$ u(-n)
   (d) $(1/2)^n$ [u(n) - u(n-10)]
   (e) $(1/2)^n$ n u(n) Where u(n) is the unit step sequence. [16]

4. Prove the following facts:
   (a) If $Z_1(s)$ and $Z_2(s)$ are positive real, so is $Z_1(s) + Z_2(s)$.
   (b) If $Z(s)$ is positive real, so is $1/Z(s)$ [8+8]

5. (a) Determine the Fourier series of the repetitive waveform as shown in figure 1 up to 7th harmonic.
   (b) Determine the fundamental frequency current in the circuit as shown in figure 2 with voltage waveform as in (a). [8+8]

6. Write the state equations for the following network using as shown in figure 3
   (a) Equivalent source method
   (b) Network topological method [8+8]

7. (a) State and prove the convolution property of the Fourier Transform.
   (b) State and prove Modulation Theorem. [8+8]

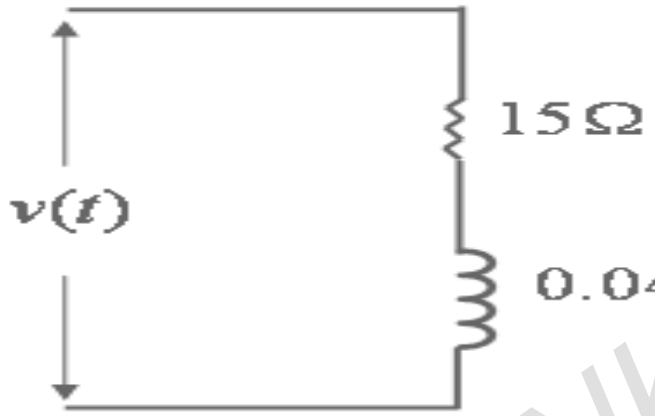

Figure 1:

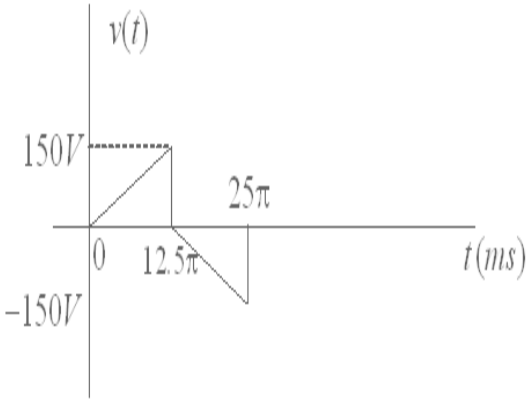

Figure 2:

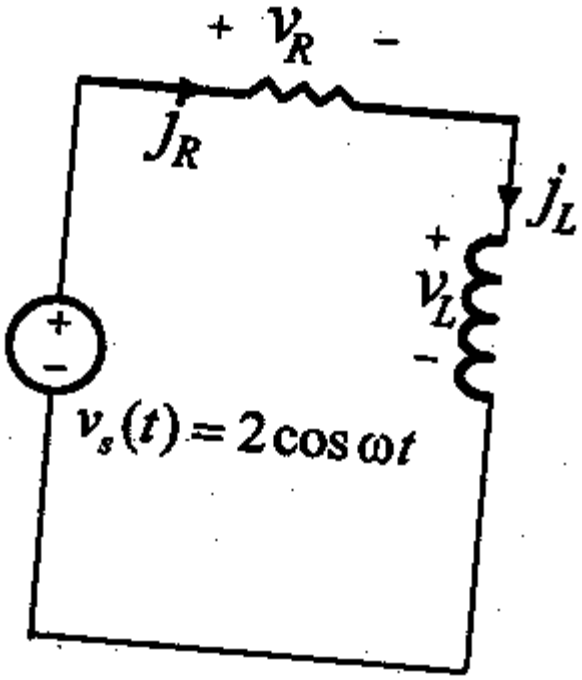

Figure 3:

8. (a) A signal g(t) consists of two frequency components $f_1 = 3.9kHz$ and $f_2 = 4.1kHz$ in such a relationship that they just cancel each other out when the signal g(t) is sampled at the instants $t = 0, T, 2T, ...,$ where $T = 125\mu s$. The signal g(t) is defined by $g(t) = \cos(2\pi f_1 t + \frac{\pi}{2}) + A\cos(2\pi f_2 t + \phi)$. Find the values of amplitude A and phase of the second frequency component.

   (b) Let E denotes the energy of a strictly band-limited signal g(t). Show that E may be expressed in terms of the sampled values of g(t), taken at the Nyquist rate, as follows

   $E = \frac{1}{2W} \sum_{n=-\infty}^{\infty} |g(\frac{n}{2W})|^2$

   Where W is the highest frequency component of g(t). [8+8]

⋆⋆⋆⋆⋆

Code No: 07A50206 **R07** **Set No. 4**

III B.Tech I Semester Examinations,May 2011
LINEAR SYSTEMS ANALYSIS
Electrical And Electronics Engineering

Time: 3 hours **Max Marks: 80**

Answer any FIVE Questions
All Questions carry equal marks

⋆⋆⋆⋆⋆

1. (a) Explain the procedure by which the impedance function can be synthesized using Cauer form I.
   (b) Using the Cauer form I, synthesize the LC impedance function $Z(s) = \frac{s(s^2+4)(s^2+6)}{(s^2+3)(s^2+5)}$ [8+8]

2. State and prove the following properties of the Fourier Transform.
   (a) Linearity
   (b) Time Shifting
   (c) Scaling in the time domain
   (d) Frequency Shifting [4+4+4+4]

3. If $f(t) = 2 + 3\cos(10\pi t + 30^0) + 4\cos(20\pi t + 60^0) + \cos(30\pi t + 90^0)$, then find
   (a) The average value of f(t)
   (b) The effective value of f(t)
   (c) Fundamental period of f(t)
   (d) The average power of f(t) [4+4+4+4]

4. Define region of convergence (ROC) and determine the general expressions for the ROC of the following sequences:
   (a) Finite Length Sequences
   (b) Righted- Sided Sequences
   (c) Left- Sided Sequences
   (d) Two- Sided Sequences [4+4+4+4]

5. Using Sturm's test, check whether the following functions are positive real or not?
   (a) $Z(s) = \frac{(s+3)}{(s+2)}$
   (b) $Z(s) = \frac{s^3+4s^2+7s+3}{s^3+3s^2+5s+6}$ [6+10]

6. Given a continuous signal $x_a(t)$ with $X_a(f) = 0$ for $|f| > B$. Determine the minimum sampling rate for the signal $y_a(t)$ defined by
   (a) $\frac{dx_a(t)}{dt}$

(b) $x_a^2(t)$

(c) $x_a(2t)$

(d) $x_a(t)\cos 6\pi Bt$ [4+4+4+4]

7. For the first order RC series circuit (with output is taken across the capacitor), find the impulse response. Using this response find its step response. [8+8]

8. Write the state equations for the following network using as shown in figure 4

   (a) Equivalent source method

   (b) Network topological method [8+8]

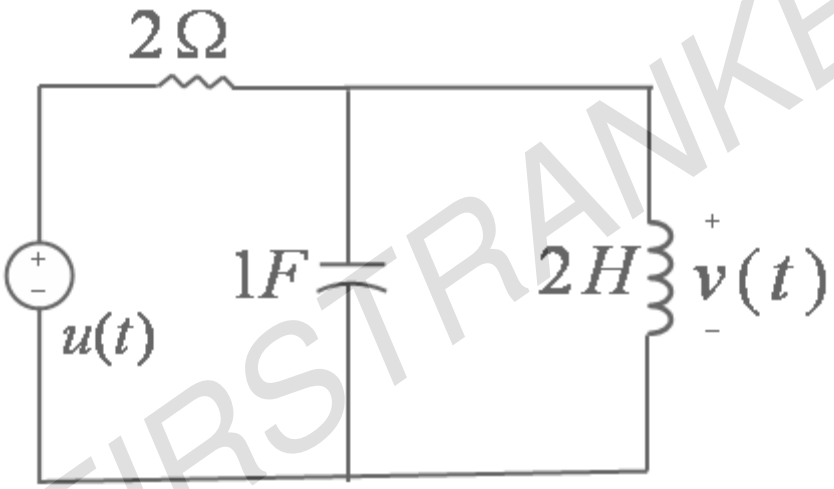

Figure 4:

⋆⋆⋆⋆⋆

Code No: 07A50206 **R07** **Set No. 1**

III B.Tech I Semester Examinations,May 2011
LINEAR SYSTEMS ANALYSIS
Electrical And Electronics Engineering

Time: 3 hours **Max Marks: 80**

Answer any FIVE Questions
All Questions carry equal marks
⋆⋆⋆⋆⋆

1. (a) What are the conditions to be satisfied for the function H(s) to be positive real function .
   (b) What are the properties of positive real function? [8+8]
2. (a) Discuss the properties of LC admittance function.
   (b) Check whether the following functions are LC admittance functions or not?
      i. $Z(s) = \frac{Ks(s^2+8)}{(s^2+3)(s^2+5)}$
      ii. $Z(s) = \frac{K(s^2+5)(s^2+10)}{(s^2+2)(s^2+7)}$
      iii. $Z(s) = \frac{K(s^2+2)(s^2+7)}{s(s^2+5)}$
      iv. $Z(s) = \frac{s^5+4s^3+6s}{2s^4+4s^2}$ [8+8]
3. (a) Determine the Fourier transform of the unit step, ramp and sinusoidal signal.
   (b) State and prove Parsevals theorem. [12+4]
4. State and prove the four properties of energy spectral density. [16]
5. The output of a rectifier is given by the equation

$$v(t) = \left\{ \begin{array}{ll} V_m \cos\omega t, & 0 \le \omega t \le \frac{\pi}{2} \\ 0, & \frac{\pi}{2} \le \omega t \le \frac{3\pi}{2} \\ V_m \cos\omega t, & \frac{3\pi}{2} \le \omega t \le 2\pi \end{array} \right\}$$

   Determine the Trigonometric form of Fourier series of v(t). [16]
6. Consider the following circuit as shown in figure 5. Where x(t) is the input and y(t) is the output.
   (a) Obtain its impulse response.
   (b) From the result of (a) obtain the step response. [8+8]
7. Write the state equations for the following network using
   (a) Equivalent source method
   (b) Network topological method [8+8]
8. Let x(n) be a sequence with z-transform X(z). Determine , in terms of X(z), the z-transforms of the following signals.

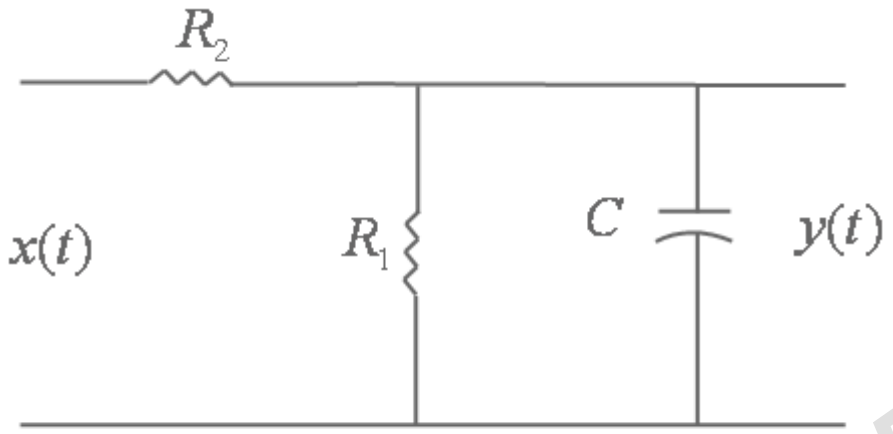

Figure 5:

(a) x_1(n) = x(n/2) , if n even, x(n)=0, if n odd.

(b) x_2(n) = x(2n)

(c) x_3(n) = n x(2n) [5+5+6]

⋆⋆⋆⋆⋆

Code No: 07A50206 **R07** **Set No. 3**

III B.Tech I Semester Examinations,May 2011
LINEAR SYSTEMS ANALYSIS
Electrical And Electronics Engineering

Time: 3 hours **Max Marks: 80**

Answer any FIVE Questions
All Questions carry equal marks

⋆⋆⋆⋆⋆

1. (a) Explain the concept of state, state variables and state model with the help of examples?
   (b) Explain about the Laplace transform method for solving the state equations. [8+8]

2. (a) Explain the Drichlet conditions.
   (b) Define even symmetry, odd symmetry and half-wave symmetry with examples?
   (c) Explain about power spectrum of a periodic signal. [4+8+4]

3. (a) State and prove the shifting theorem.
   (b) Obtain the impulse response of the following RLC network. as shown in figure 6 [8+8]

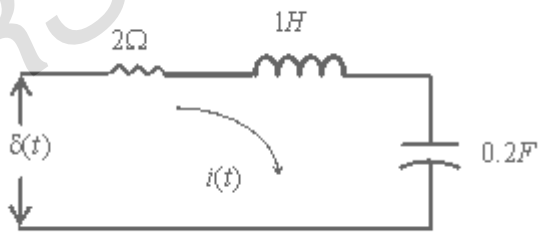

Figure 6:

4. The current in the RL circuit with R=12Ω and L=6 H is

   $i(t) = 12\sin 900t + 7\sin 2700t + 4\sin 4500t$. Determine the effective average voltage and average power. [10+6]

5. (a) Using the Foster form I, synthesize the RC impedance function $Z(s) = \frac{6(s+3)(s+9)}{s(s+6)}$.
   (b) Using the Foster form I, synthesize the RL admittance function $Z(s) = \frac{6(s+3)(s+9)}{s(s+6)}$ [8+8]

6. (a) A band-pass signal g(t) has no frequency component outside the interval $f_1 \leq |f| \leq f_2$, where $f_1 = 0.995$ MHz and $f_2 = 1$ MHz. Find the lowest possible sampling rate for the signal, so that there is no distortion due to sampling. [8+8]

   (b) The spectrum of a signal g(t) is as shown in figure 7 The signal is sampled at the Nyquist rate with a periodic train of rectangular pulses of duration 50/3 milliseconds. Plot the spectrum of the sampled signal for frequencies up to 50 Hz. [8+8]

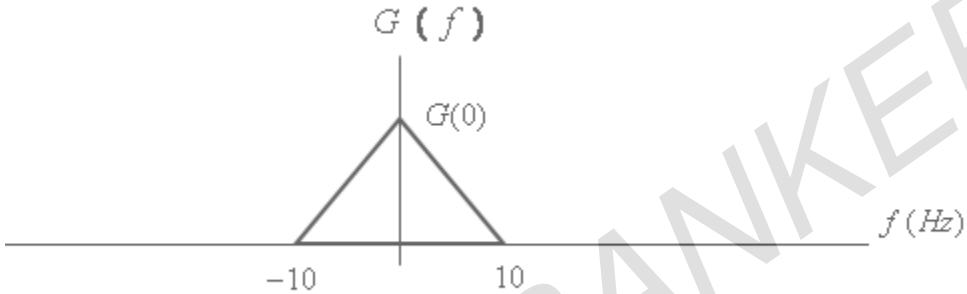

Figure 7:

7. By first differentiating X(z) and then using appropriate properties of the z- transform, determine x(n) for the following transforms.

   (a) X(z) = log (1-2z), $|z| < 1/2$

   (b) X(z) = log (1-z^{-1}), $|z| > 1/2$ [8+8]

8. (a) Give two examples to show that if $Z_1(s)$ and $Z_2(s)$ are positive real, then $Z_1(s)/Z_2(s)$ need not be positive real.

   (b) Show that, if a one-port is made of lumped passive linear time-invariant elements and if it has a driving-point impedance Z(s), then Z(s) is a positive real function. [8+8]

⋆⋆⋆⋆⋆