CODE NO: 07A80108 | R07 | SET No - 1

IV B.TECH - II SEMESTER EXAMINATIONS, APRIL/MAY, 2011
ADVANCED STRUCTURAL ANALYSIS
(CIVIL ENGINEERING)

Time: 3hours **Max. Marks: 80**

Answer any FIVE questions
All Questions Carry Equal Marks
- - -

1. Analyze the portal frame shown in Fig.1, using moment distribution method. [16]

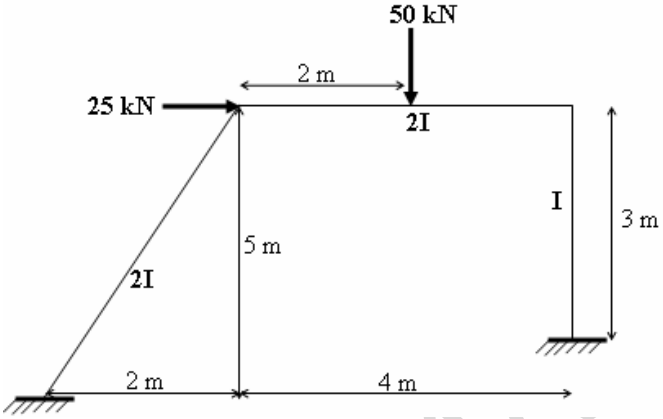

Fig.1

2. Analyze the frame shown in Fig.2, by strain energy method. [16]

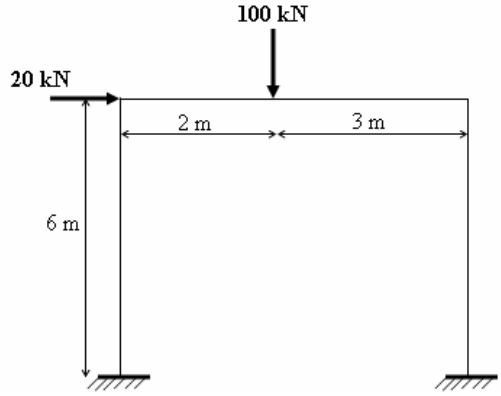

Fig.2

3. Two point loads 75 kN and 150 kN spaced 3.5 m apart crosses a simply supported girder of span 18 m from left to right with 75 kN load leading. Draw the influence lines for shear force and bending moment at a section 8 m from the right support. Also find the absolute maximum bending moment due to the given loads. [16]

4. A three hinged parabolic arch has span 25 m and a central rise 5 m. Three wheel loads 50 kN, 100 kN and150 kN spaced at 3 m and 2 m respectively, cross the arch from right to left with the 50 kN leading. Using the influence line diagrams find the horizontal thrust, bending moment and the shear force when the leading load is 10 m from the left support. [16]

5. Analyze the plane truss shown in Fig.3, using flexibility method. [16]

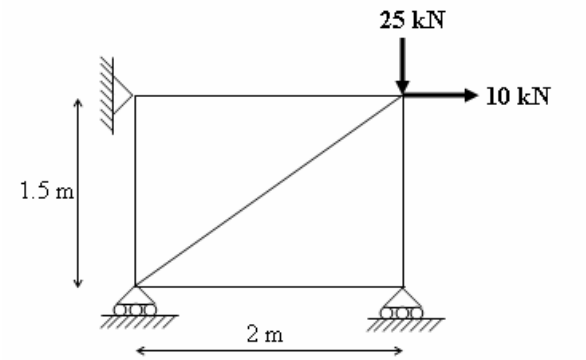

Fig. 3

6. Analyze the beam shown in Fig.4, using stiffness method. [16]

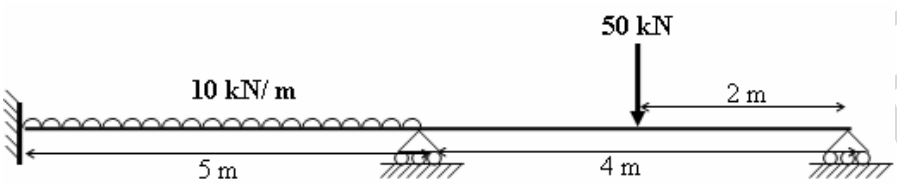

Fig.4

7. Using flexibility method, analyse the plane frame shown in Fig.5 and draw the bending moment diagram. [16]

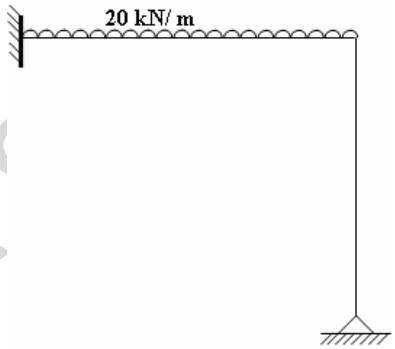

Fig. 5

8. Determine the plastic moment capacity of a continuous beam shown in Fig.6. [16]

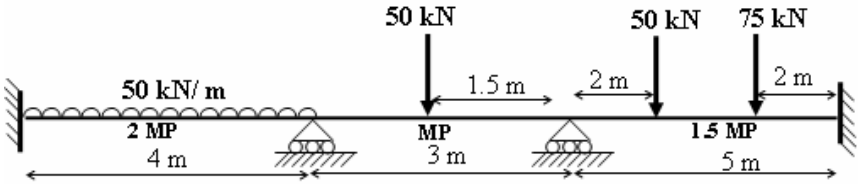

Fig.6

*****

CODE NO: 07A80108 | R07 | SET No - 2

IV B.TECH - II SEMESTER EXAMINATIONS, APRIL/MAY, 2011
ADVANCED STRUCTURAL ANALYSIS
(CIVIL ENGINEERING)

Time: 3hours **Max. Marks: 80**

Answer any FIVE questions
All Questions Carry Equal Marks
- - -

1. Analyze the frame shown in Fig.1, using moment distribution method. [16]

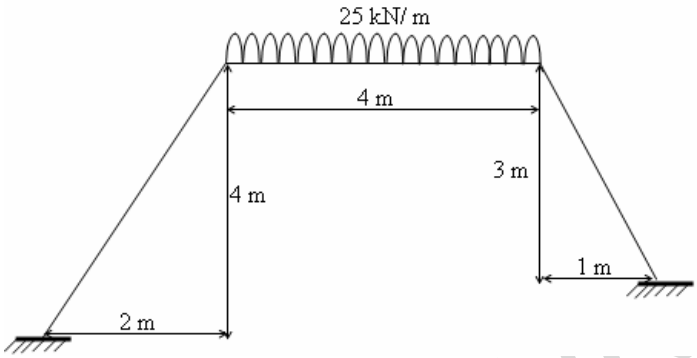

Fig.1

2. Analyze the frame shown in Fig.2 by strain energy method. [16]

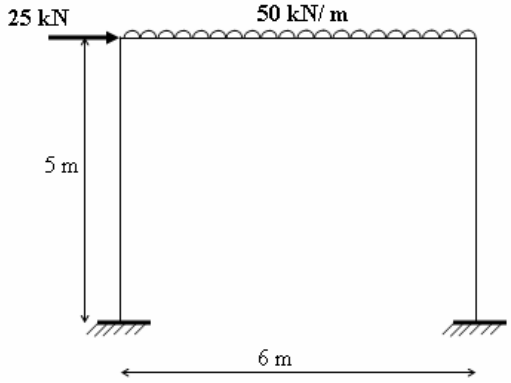

Fig.2

3. Four wheel loads 100 kN, 150 kN, 300 kN and 125 kN cross a simply supported girder of span 21 m. Using influence lines, determine the maximum positive and negative shear force at the mid-span of the girder. Also find the location and magnitude of absolute maximum bending moment. [16]

4. Draw the influence line diagrams for the bending moment and shear force at a section 12 m from the right support of a three hinged circular arch of span 30 m and radius 25 m. Also find the maximum positive bending moment at the section due to100 kN. [16]

5. Using flexibility method, analyze the plane truss shown in Fig.3. [16]

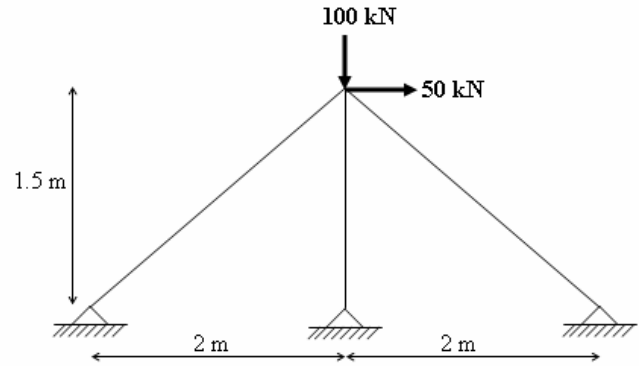

Fig. 3

6. Using stiffness method analyze the beam shown in Fig.4. [16]

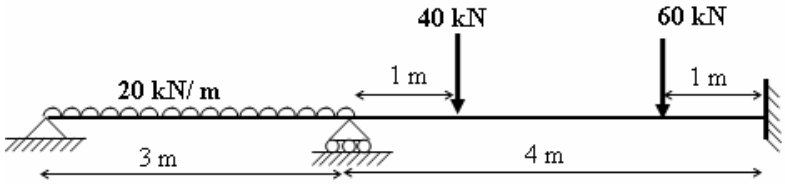

Fig.4

7. Analyze the plane frame shown in Fig.5 using flexibility method and draw the bending moment diagram. [16]

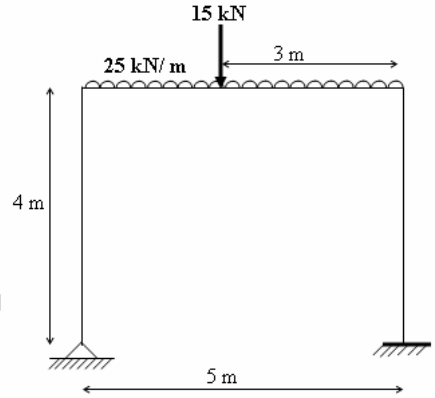

Fig. 5

8. Determine the plastic moment capacity of a continuous beam shown in Fig.6. [16]

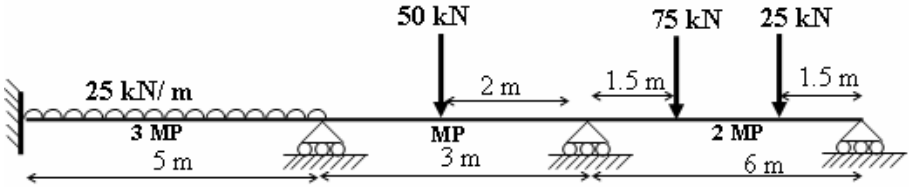

Fig.6

*****

CODE NO: 07A80108 | R07 | SET No - 3

IV B.TECH - II SEMESTER EXAMINATIONS, APRIL/MAY, 2011
ADVANCED STRUCTURAL ANALYSIS
(CIVIL ENGINEERING)

Time: 3hours **Max. Marks: 80**

Answer any FIVE questions
All Questions Carry Equal Marks
- - -

1. Analyze the frame shown in Fig.1, using moment distribution method. [16]

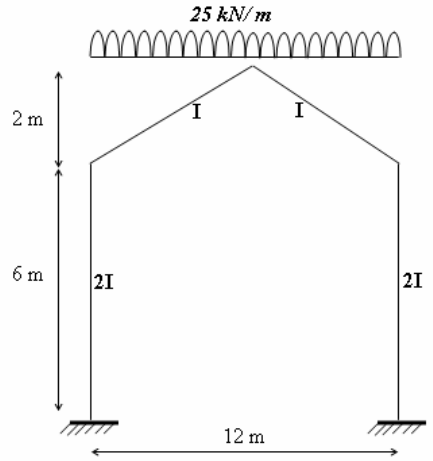

Fig.1

2. Analyze the continuous beam shown in Fig.2 by strain energy method. [16]

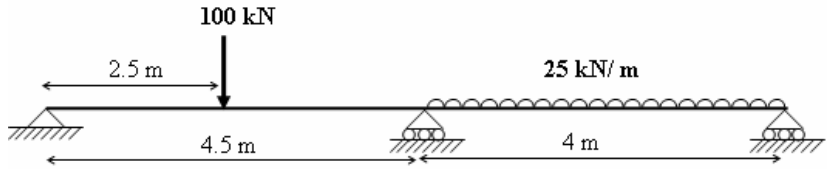

Fig.2

3. Draw influence diagrams for the forces in the marked members (×) of the plane truss shown in Fig.3. [16]

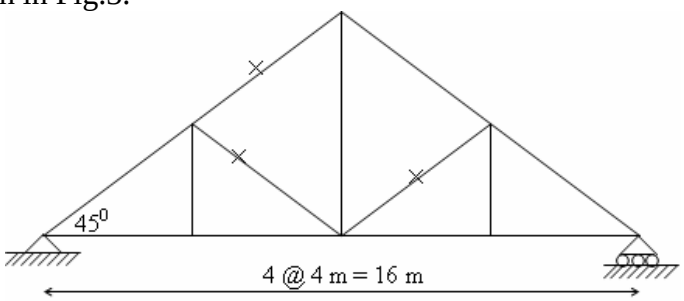

Fig.3

4. A two hinged circular arch of span 25 m and central rise 5 m. using the influence line diagram calculate the bending moment and shear force as a section 15 m from the left support. Assume that the moment of inertia at a section varies as a secant of the inclination at the section. [16]

5. Analyze the continuous beam shown in Fig.4 using flexibility method. [16]

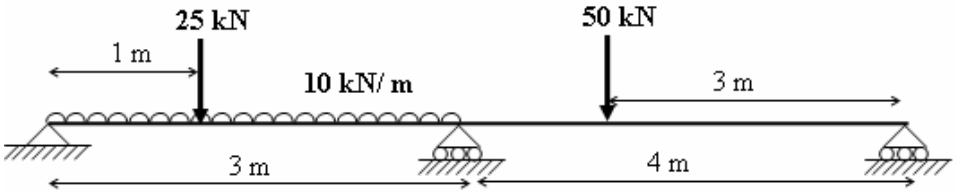

Fig.4

6. Analyze the plane truss shown in Fig.5 using stiffness method. Assume the axial rigidity is constant. [16]

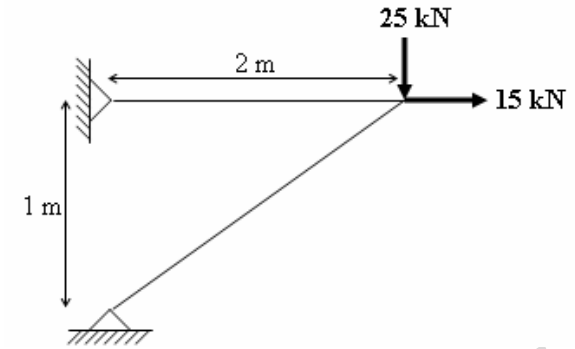

Fig.5

7. Using the stiffness method, analyze the plane frame shown in Fig.6 and draw the bending moment diagram. [16]

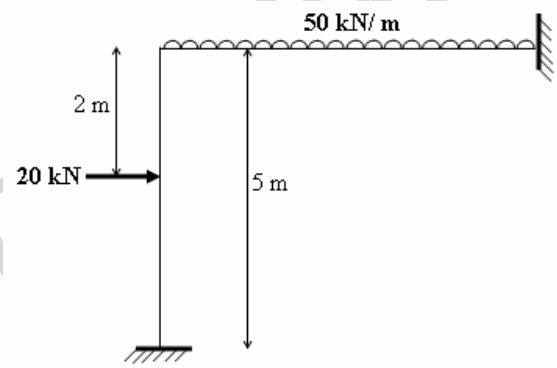

Fig.6

8. Determine the ultimate strength of a continuous beam shown in Fig.7. [16]

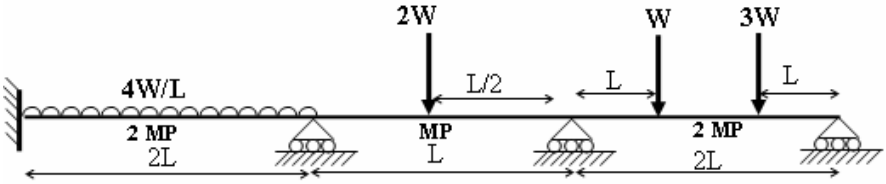

Fig.7

*****

CODE NO: 07A80108 | R07 | SET No - 4

IV B.TECH - II SEMESTER EXAMINATIONS, APRIL/MAY, 2011
ADVANCED STRUCTURAL ANALYSIS
(CIVIL ENGINEERING)

Time: 3hours **Max. Marks: 80**

Answer any FIVE questions
All Questions Carry Equal Marks
- - -

1. Analyze the frame shown in Fig.1, using moment distribution method and draw the shear force and bending moment diagrams. [16]

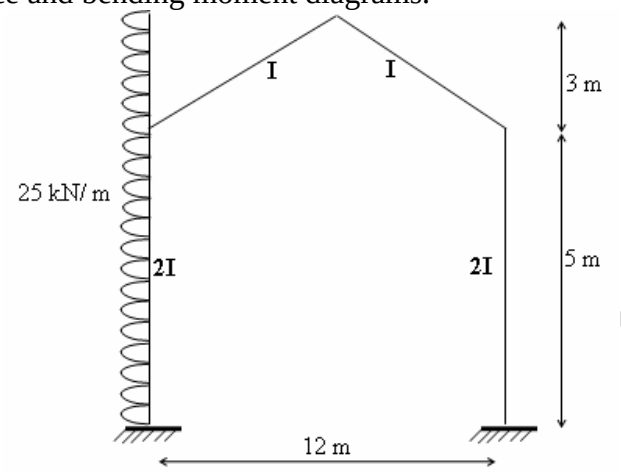

Fig.1

2. Analyze the continuous beam shown in Fig.2 by strain energy method. [16]

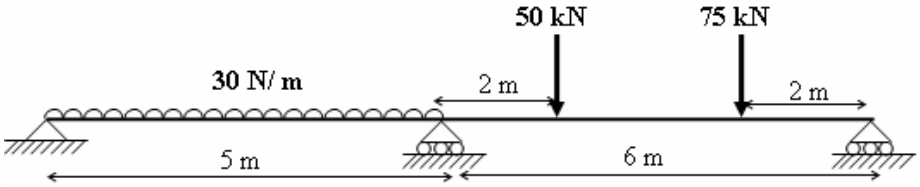

Fig.2

3. Draw influence diagrams for the forces in the marked members (×) of the plane truss shown in Fig.3. [16]

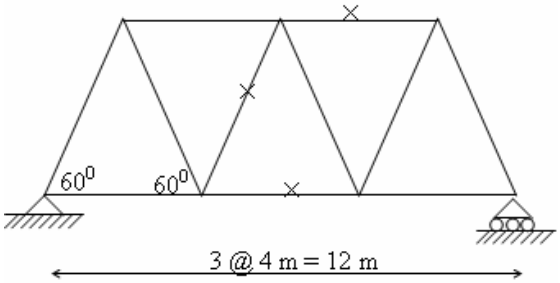

Fig.3

4. A two hinged parabolic arch has 28 m span and 5 m central rise. Using the influence line diagram calculate the bending moment and shear force as a section 12 m from the right support. Assume that the moment of inertia at a section varies as a secant of the inclination at the section. [16]

5. Using flexibility method, analyze the continuous beam shown in Fig.4. [16]

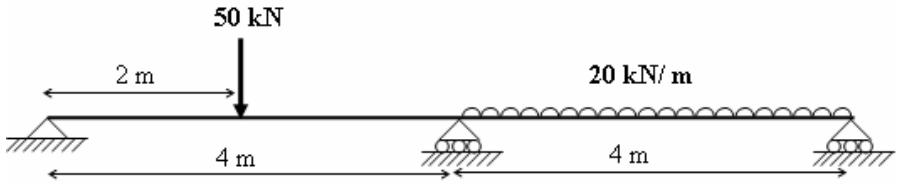

Fig.4

6. Using stiffness method analyze the truss shown in Fig.5 Assume the axial rigidity is constant. [16]

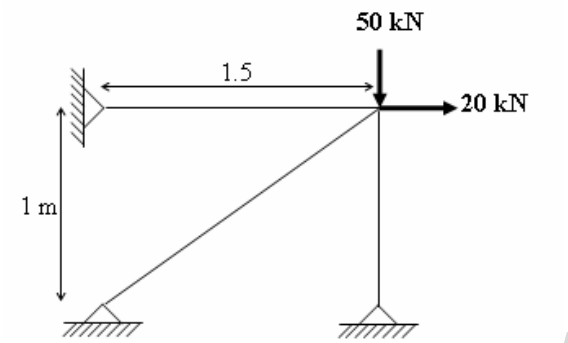

Fig.5

7. Analyze the plane frame shown in Fig.6 using the stiffness method and draw the bending moment diagram. [16]

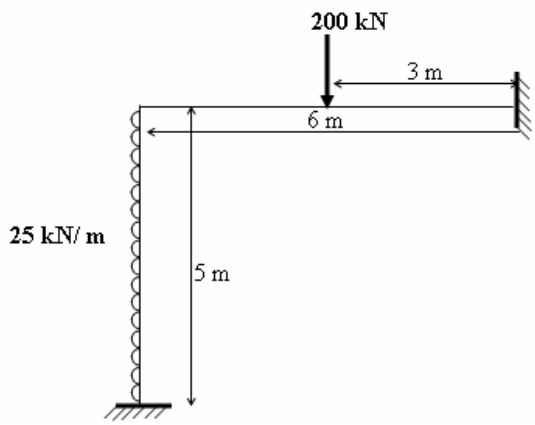

Fig.6

8. Determine the plastic moment capacity of a continuous beam shown in Fig.7. [16]

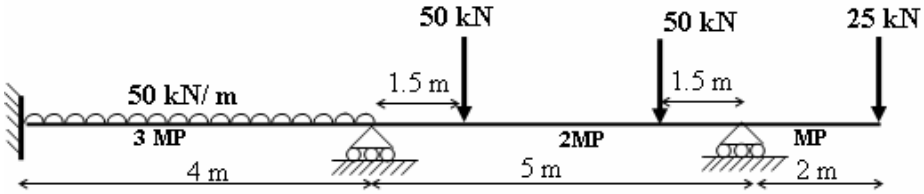

Fig.7

*****